OWNER'S MANUAL

2026 XR150L

This manual should be considered a permanent part of the vehicle and should remain with the vehicle when it is resold.

This publication includes the latest production information available before printing. Honda Motor Co., Ltd. reserves the right to make changes at any time without notice and without incurring any obligation.

No part of this publication may be reproduced without written permission.

The vehicle pictured in this owner's manual may not match your actual vehicle.

© 2025 Honda Motor Co., Ltd.

Welcome

Congratulations on your purchase of a new Honda vehicle. Your selection of a Honda makes you part of a worldwide family of satisfied customers who appreciate Honda's reputation for building quality into every product.

To ensure your safety and riding pleasure:

- Read this owner's manual carefully.
- Follow all recommendations and procedures contained in this manual.
- Pay close attention to safety messages contained in this manual and on the vehicle.

To protect your investment, we urge you to take responsibility for keeping your vehicle well-serviced and maintained. Also, observe the break-in guidelines and always perform the pre-ride inspection and other periodic checks in this manual.

When service is required, remember that your Honda dealer knows your vehicle best. If you have the required mechanical "know-how" and tools, you can purchase an official Honda Service Manual to help you perform many maintenance and repair tasks. ➔ P. 105
Read the warranty information thoroughly so that you understand the warranty coverage and are aware of your rights and responsibilities. ➔ P. 106
You may also want to visit our website at www.powersports.honda.com.
Canada www.honda.ca.
Happy riding!

A Few Words About Safety

Your safety, and the safety of others, is very important. Operating this vehicle safely is an important responsibility.
To help you make informed decisions about safety, we have provided operating procedures and other information on safety labels and in this manual. This information alerts you to potential hazards that could hurt you or others.
Of course, it is not practical or possible to warn you about all hazards associated with operating or maintaining a vehicle. You must use your own good judgment.

You will find important safety information in a variety of forms, including:

- Safety labels on the vehicle.
- Safety Messages preceded by a safety alert symbol ⚠ and one of three signal words: DANGER, WARNING, or CAUTION.
  These signal words mean:

⚠DANGER

You WILL be KILLED or SERIOUSLY HURT if you don't follow instructions.

⚠WARNING

You CAN be KILLED or SERIOUSLY HURT if you don't follow instructions.

⚠CAUTION

You CAN be HURT if you don't follow instructions.

Other important information is provided under the following title:

NOTICE Information to help you avoid damage to your vehicle, other property, or the environment.

Contents

Vehicle Safety P. 2

Operation Guide P. 16

Maintenance P. 32

Troubleshooting P. 78

Information P. 89

Specifications P. 113

Index P. 117

Vehicle Safety

This section contains important information for safe riding of your vehicle.
Please read this section carefully.

Safety Guidelines ..... P. 3
Safety Labels ..... P. 7
Safety Precautions ..... P. 9
Riding Precautions ..... P. 10
Accessories & Modifications ..... P. 13
Off-Road Safety ..... P. 14
Loading ..... P. 15

Safety Guidelines

Follow these guidelines to enhance your safety:

- Perform all routine and regular inspections specified in this manual.
- Stop the engine and keep sparks and flames away before filling the fuel tank.
- Do not run the engine in enclosed or partly enclosed areas. Carbon monoxide in exhaust gases is toxic and can kill you.

Always Wear a Helmet

It's a proven fact: helmets and protective apparel significantly reduce the number and severity of head and other injuries. Always wear an approved helmet and protective apparel.
➔P. 9

Before Riding

Make sure that you are physically fit, mentally focused, and free of alcohol and drugs. Check that you and your passenger are both wearing an approved helmet and protective apparel. Instruct your passenger on holding onto the grab rail or your waist, leaning with you in turns, and keeping their feet on the footpegs, even when the vehicle is stopped.

Take Time to Learn & Practice

Even if you have ridden other vehicles, practice riding in a safe area to become familiar with how this vehicle works and handles, and to become accustomed to the vehicle's size and weight.
We recommend that all riders take a certified course approved by the Motorcycle Safety Foundation (MSF) or a state approved training course. New riders should start with the basic course, and even experienced riders will find the advanced course beneficial.

Continued

For information about the MSF training course nearest you, call the national toll-free number: (800) 446-9227.

USA Other riding tips can be found in the You and Your Motorcycle Riding Tips booklet that came with your vehicle.
Developing off-road riding skill is a gradual step-by step process. Start by practicing at low speeds in a safe area and slowly build your skills.
Ask your dealer if there are off-road riding groups in your area where you can learn from experienced riders. Also be sure to read the Tips & Practice Guide for the Off-Highway Motorcyclist that came with your new vehicle.

Ride Defensively

Always pay attention to other vehicles around you, and do not assume that other drivers see you. Be prepared to stop quickly or perform an evasive maneuver.

Make Yourself Easy to See

Make yourself more visible, especially at night, by wearing bright reflective clothing, positioning yourself so other drivers can see you, signaling before turning or changing lanes, and using your horn when necessary.

Be Alert for Off-road Hazards

The terrain can be present a variety of challenges when you ride off-road.
Continually “read” the terrain for unexpected turns, drop-offs, rocks, ruts and other hazards.
Always keep your speed low enough to allow time to see and react to hazards.

Ride within Your Limits

Never ride beyond your personal abilities or faster than conditions warrant. Fatigue and inattention can impair your ability to use good judgment and ride safely.

Don't Drink or Use Drugs and Ride

Alcohol or drugs and riding don't mix. Even one alcoholic drink can reduce your ability to respond to changing conditions, and your reaction time gets worse with every additional drink. The same is true for drug use. Don't drink or use and ride, and don't let your friends do it either.

Keep Your Honda in Safe Condition

It's important to keep your vehicle properly maintained and in safe riding condition. Having a breakdown can be difficult, especially if you are stranded off-road far from your base. Inspect your vehicle before every ride and perform all recommended maintenance. Never exceed load limits (➡ P. 15), and do not modify your vehicle or install accessories that would make your vehicle unsafe (➡ P. 13).

If You are Involved in a Crash

Personal safety is your first priority. If you or anyone else has been injured, take time to assess the severity of the injuries and whether it is safe to continue riding. Call for emergency assistance if needed. Also follow applicable laws and regulations if another person or vehicle is involved in the crash.

Continued

If you decide to continue riding, first turn the ignition switch to the OFF position, and evaluate the condition of your vehicle. Inspect for fluid leaks, check the tightness of critical nuts and bolts, and check the handlebar, control levers, brakes, and wheels. Ride slowly and cautiously. Your vehicle may have suffered damage that is not immediately apparent. Have your vehicle thoroughly checked at a qualified service facility as soon as possible.

Carbon Monoxide Hazard

Exhaust contains poisonous carbon monoxide, a colorless, odorless gas. Breathing carbon monoxide can cause loss of consciousness and may lead to death.
If you run the engine in a confined or even partly enclosed area, the air you breathe could contain a dangerous amount of carbon monoxide.
Never run your vehicle inside a garage or other enclosure.

⚠WARNING

Running the engine of your vehicle while in an enclosed or even partially enclosed area can cause a rapid build-up of toxic carbon monoxide gas.

Breathing this colorless, odorless gas can quickly cause unconsciousness and lead to death.

Only run your vehicle's engine when it is located in a well ventilated area outdoors.

Safety Labels

Safety and information labels on your vehicle provide important safety information and may warn you of potential hazards that could cause serious injury. Read these labels carefully and don't remove them.

If a label comes off or becomes hard to read, contact your dealer for a replacement.

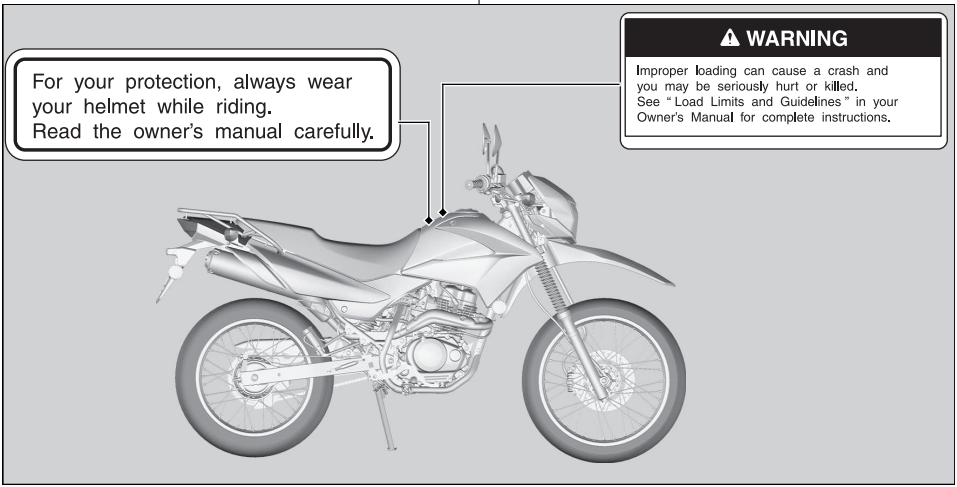

Continued

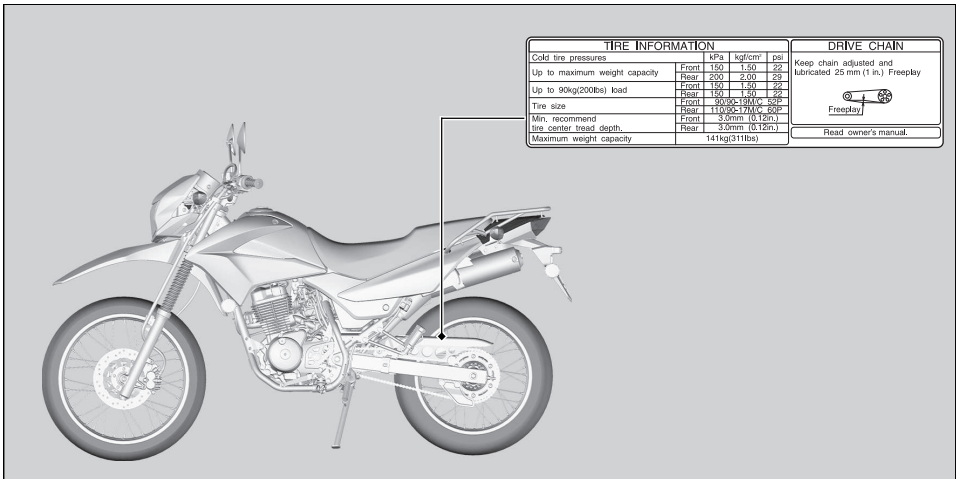
TIRE INFORMATION
Cold tire pressures
kPa
kgf/cm²
psi
Up to maximum weight capacity
Front 150 1.50 22
Rear 200 2.00 29
Up to 90kg(200lbs) load
Front 150 1.50 22
Rear 150 1.50 22
Tire size
Front 90/90-19M/C 52P
Rear 110/90-17M/C 62P
Min. recommend tire center tread depth.
Front 3.0mm (0.12in.)
Rear 3.0mm (0.12in.)
Maximum weight capacity
141kg(311lbs)
DRIVE CHAIN
Keep chain adjusted and lubricated 25 mm (1 in.) Freeplay
Freeplay
Read owner's manual.

Safety Precautions

- Ride cautiously and keep your hands on the handlebar and feet on the footpegs.
- Instruct your passenger to keep their hands on the grab rail or your waist and their feet on the footpegs while riding.
- Always consider the safety of your passenger, as well as other drivers and riders.

Protective Apparel

Make sure that you and any passenger are wearing an approved helmet, eye protection, and high-visibility protective clothing. Avoid wearing loose clothes that could get caught on any part of the vehicle. Ride defensively in response to weather and road conditions.

Helmet

Should be safety-standard certified, high-visibility, and the correct size for your head.

- Must fit comfortably but securely, with the chin strap fastened.
- Face shield with unobstructed field of vision or other approved eye protection.

USA Look for a DOT (Department of Transportation) certification label on any helmet you buy.

⚠WARNING

Not wearing a helmet increases the chance of serious injury or death in a crash.

Make sure that you and any passenger always wear an approved helmet and protective apparel.

Continued

Gloves

Full-finger leather gloves with high abrasion resistance.

Boots or Riding Shoes

Sturdy boots with non-slip soles and ankle protection.

Jacket and Pants

Protective, highly visible, long-sleeved jacket and durable long pants for riding (or a protective suit).

Additional Off-road Gear

On-road apparel may also be suitable for casual off-road riding. But if you plan on any serious off-road riding you will need more serious off-road gear. In addition to your helmet and eye protection, we recommend off-road motorcycle boots and gloves, riding pants with knee and hip pads, a jersey with elbow pads, and a chest/shoulder protector.

Riding Precautions

Break-in Period

During the first 300 miles (500 km) of running, follow these guidelines to ensure your vehicle's future reliability and performance.

- Avoid full-throttle starts and rapid acceleration.
- Avoid hard braking and rapid down-shifts.
- Ride conservatively.

Brakes

Observe the following guidelines:

- Avoid excessively hard braking and downshifting.
  - ▶ Sudden braking can reduce the vehicle's stability.
  - ▶ Where possible, reduce speed before turning; otherwise, you risk sliding out.

- Exercise caution on low traction surfaces.
  ▶ The tires slip more easily on such surfaces and braking distances are longer.
- Avoid continuous braking.
  ▶ Repeated braking, such as when descending long, steep slopes, can seriously overheat the brakes, reducing their effectiveness. Use engine braking with intermittent use of the brakes to reduce speed.
- For full braking effectiveness, operate both the front and rear brakes together.

Engine Braking

Engine braking helps slow your vehicle down when you release the throttle. For further slowing action, downshift to a lower gear. Use engine braking with intermittent use of the brakes to reduce speed when descending long, steep slopes.

Wet or Rainy Conditions

Road surfaces are slippery when wet, and wet brakes further reduce braking efficiency. Exercise extra caution when braking in wet conditions.
If the brakes get wet, apply the brakes while riding at low speed to help them dry.

Parking

- Park on a firm, level surface.
- If you must park on a slight incline or loose surface, park so that the vehicle cannot move or fall over.
- Make sure that high-temperature parts cannot come into contact with flammable materials.
- Do not touch the engine, muffler, brakes, and other high-temperature parts until they cool down.

Continued

- To reduce the likelihood of theft, always lock the handlebar and remove the key when leaving the vehicle unattended.
  Use of an anti-theft device is also recommended.

Parking with the Side Stand

1. Stop the engine.
2. Push the side stand down.
3. Slowly lean the vehicle to the left until its weight rests on the side stand.
4. Turn the handlebar fully to the left.
   ▶ Turning the handlebar to the right reduces stability and may cause the vehicle to fall.
5. Turn the ignition switch to the LOCK position and remove the key. ➡ P. 22
6. Turn the fuel valve to the OFF position.

Refueling and Fuel Guidelines

Follow these guidelines to protect the engine and fuel system:

- Use only unleaded gasoline.
- Use the recommended octane number. Using lower octane gasoline will result in decreased engine performance.
- Do not use fuels containing a high concentration of alcohol. ➡ P. 104
- Do not use stale or contaminated gasoline or an oil/gasoline mixture.
- Avoid getting dirt or water in the fuel tank.

Accessories & Modifications

We strongly advise that you do not add any accessories that were not specifically designed or approved for your vehicle by Honda or make modifications to your vehicle from its original design. Doing so can make it unsafe. Modifying your vehicle may also void your warranty and make your vehicle illegal to operate on public roads. Before deciding to install accessories on your vehicle, be certain the modification is safe and legal.

⚠WARNING

Improper accessories or modifications can cause a crash in which you can be seriously hurt or killed.

Follow all instructions in this owner's manual regarding accessories and modifications.

Do not pull a trailer with, or attach a sidecar to, your vehicle. Your vehicle was not designed for these attachments, and their use can seriously impair your vehicle's handling.

Off-Road Safety

Learn to ride in an uncongested off-road area free of obstacles before venturing onto unfamiliar terrain.

- Always obey local off-road riding laws and regulations.
- Obtain permission to ride on private property. Avoid posted areas and obey “NO Trespassing” signs.
- Ride with a friend on another vehicle so that you can assist each other in case of trouble.
- Familiarity with your vehicle is critically important should a problem occur far from help.
- Never ride beyond your ability and experience or faster than conditions warrant.
- If you are not familiar with the terrain, ride cautiously. Hidden rocks, holes, or ravines could spell disaster.
- A muffler is required in most off-road areas. Don't modify your exhaust system. Remember that excessive noise bothers everyone and creates a bad image for motorcycling.

Loading

- Carrying extra weight affects your vehicle's handling, braking, and stability.
  Always ride at a safe speed for the load you are carrying.
- Avoid carrying an excessive load and keep within specified load limits.
  Maximum weight capacity/Maximum weight on rear carrier P. 113
- Tie all luggage securely, evenly balanced, and close to the center of the vehicle.
- Do not place objects near the lights or the muffler.

Also follow these guidelines when you ride off-road on rough terrain:

- Do not carry a passenger.
- Keep cargo small and light weight.
  Make sure it cannot easily be caught on brush or other objects, and that it does not interfere with your ability to shift position to maintain balance and stability.

⚠WARNING

Overloading or improper loading can cause a crash and you can be seriously hurt or killed.

Follow all load limits and other loading guidelines in this manual.

Parts Location

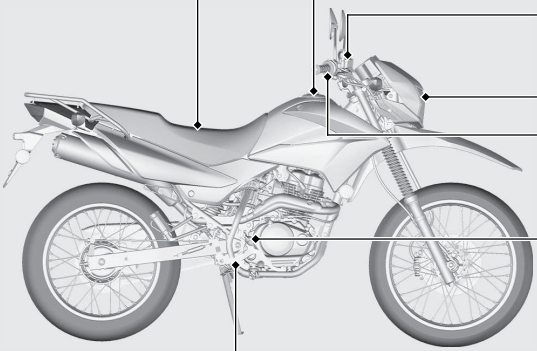

Seat P.56

Fuel fill cap P.28

Front brake fluid reservoir P.62

Headlight P.82

Throttle grip P.77

Engine oil fill cap/dipstick P.60

Rear brake pedal P.64

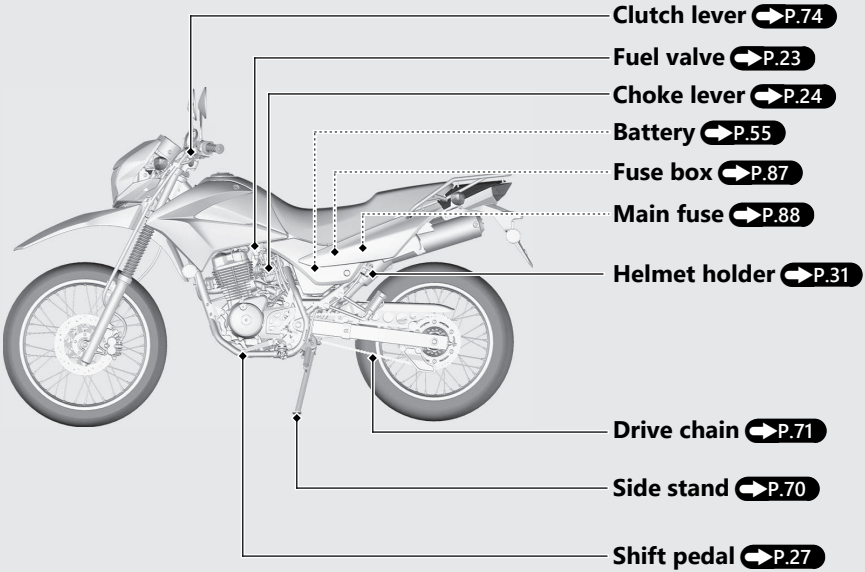
Clutch lever P.74
Fuel valve P.23
Choke lever P.24
Battery P.55
Fuse box P.87
Main fuse P.88
Helmet holder P.31
Drive chain P.71
Side stand P.70
Shift pedal P.27

Instruments

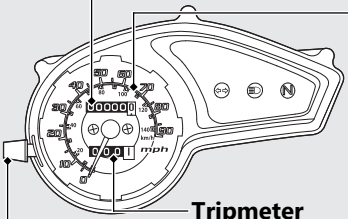

Odometer
Total distance ridden.

Speedometer
Shows riding speed in miles (USA) or kilometers (Canada) per hour.

Tripmeter
Distance ridden since tripmeter was reset.

Tripmeter reset knob
The tripmeter reset knob is used to reset the tripmeter to zero (0) by turning the knob in the direction shown in the illustration.

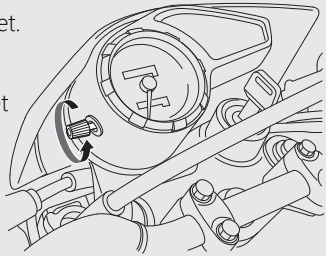

Indicators

If one of these indicators does not come on when it should, have your dealer check for problems.

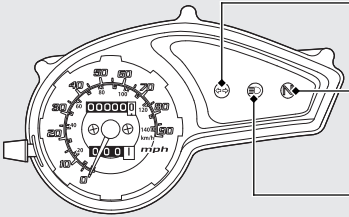

Turn signal indicator

Neutral indicator
Comes on when the transmission is in Neutral.

High beam indicator

Switches

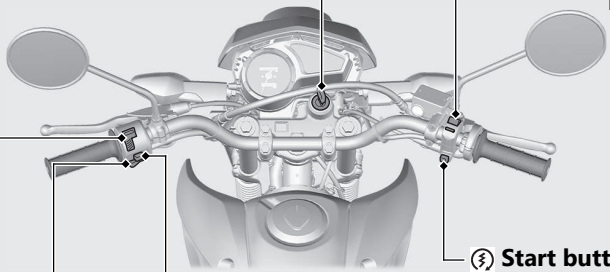

Engine stop switch
Should normally remain in the (Run) position.
▶ In an emergency, switch to the (Stop) position to stop the engine.

Start button
Headlight turns off when operating the starter motor.

Turn signal switch
▶ Pressing the switch turns the turn signal off.

Horn button

Headlight dimmer switch
- : High beam
- : Low beam

Ignition switch

Switches the electrical system on/off, locks the steering.

▶ Key can be removed when in the OFF or LOCK position.

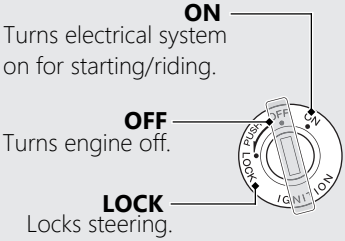

Switches *(Continued)*

Steering Lock

Lock the steering when parking to help prevent theft.
A U-shaped wheel lock or similar device is also recommended.

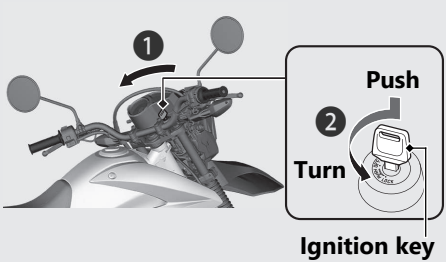

Locking

1. Turn the handlebar all the way to the left.
2. Push the key down, and turn the ignition switch to the LOCK position.
   ► Jiggle the handlebar if the lock is difficult to engage.
3. Remove the ignition key.

Unlocking

Insert the key, and turn the ignition switch to the OFF position.

Fuel Valve

The three-way fuel valve is used to control the flow of fuel from the fuel tank to the carburetor.

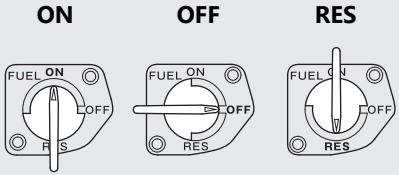

ON: normal position for riding.
OFF: for parking, storing, or transportation.
RES: for extra fuel to get to a gas station for refueling.

Starting the Engine

Start your engine using the following procedure.

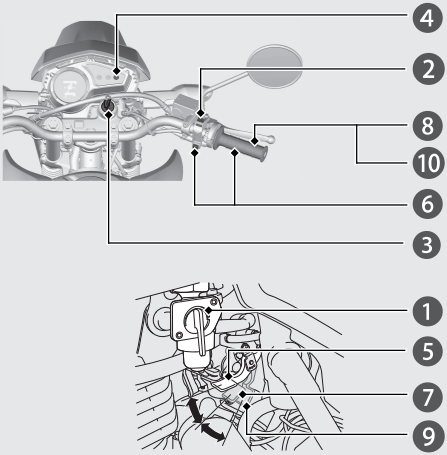

To restart a warm engine, follow the procedure for "High Air Temperature."

NOTICE

- If the engine does not start within 5 seconds, turn the ignition switch to the OFF position and wait 10 seconds before trying to start the engine again to recover battery voltage.
- Extended fast idling and revving the engine can damage the engine and the exhaust system.

Your vehicle's carburetor is equipped with a heater.
Your carburetor is suitable for use in cold regions.

Normal Air Temperature 10 - 35ºC (50 - 95ºF):

1. Turn the fuel valve to the ON position.
2. Make sure the engine stop switch is in the ◯ (Run) position.
3. Turn the ignition switch to the ON position.
4. Shift the transmission to Neutral (N indicator to come on). Alternatively, pull in the clutch lever to start your vehicle while the transmission is in gear as long as the side stand is raised.
5. Pull the choke lever up all the way to fully on.
6. With the throttle slightly open, press the start button.
7. Immediately after the engine starts, push the choke lever down to the halfway position.
8. Warm up the engine by opening and closing the throttle slightly.
9. About a quarter minute after the engine starts, push the choke lever down all the way to fully off.
10. If idling is unstable, open the throttle slightly.

High Air Temperature 35ºC (95ºF) or Above:

1. Follow steps 1 - 4 under "Normal Air Temperature."
2. Do not use the choke.
3. With the throttle slightly open, press the start button.

Low Air Temperature 10ºC (50ºF) or Below:

1. Follow steps 1 - 7 under "Normal Air Temperature."
2. Warm up the engine by opening and closing the throttle slightly.
3. Continue warming up the engine until it runs smoothly and responds to the throttle when the choke lever is at fully off.

Continued

Starting the Engine *(Continued)*

If the engine does not start:

① Leave the engine stop switch set to (Run) position.
② Turn the ignition switch to the ON position.
③ Shift the transmission to Neutral (N indicator to come on).
④ Push the choke lever down all the way to fully off.
⑤ Open the throttle fully.
⑥ Press the start button for 5 seconds.
⑦ If the engine starts, quickly close the throttle, then, if idling is unstable, open it slightly.
If the engine does not start, wait 10 seconds, then follow steps ① - ③ under "High Air Temperature".

If Engine Will Not Start P.79

Shifting Gears

Your vehicle transmission has 5 forward gears in a one-down, four-up shift pattern.

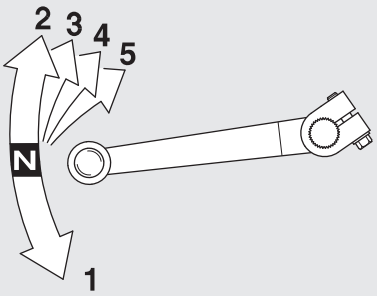

If you put the vehicle in gear with the side stand down, the engine will shut off.

Recommended Shift Points

Shifting Up	
From 1st to 2nd	12 mph (20 km/h)
From 2nd to 3rd	19 mph (30 km/h)
From 3rd to 4th	25 mph (40 km/h)
From 4th to 5th	31 mph (50 km/h)

Shifting Down	
From 5th to 4th	22 mph (35 km/h)
From 4th to 3rd	16 mph (25 km/h)

NOTICE

Improper shifting can damage the engine, transmission, and drive train. Also, coasting or towing the vehicle for long distances with the engine off can damage the transmission.

Refueling

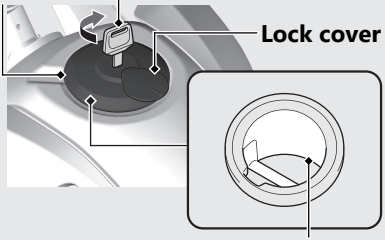

Do not fill with fuel above the lower edge of the filler neck.

Fuel type: Unleaded gasoline only
Recommended fuel octane number:
Pump Octane Number (PON) 86 or higher.
Tank capacity including the reserve:
2.77 US gal (10.5 L)
Reserve capacity: 0.66 US gal (2.5 L)

The tank should be refilled as soon as possible after switching to reserve, and the fuel valve should be returned to the ON position after refueling to avoid running out of fuel with no reserve. P.23

Refueling and Fuel Guidelines P.12

Opening the Fuel Fill Cap

Open the lock cover, insert the ignition key, and turn it clockwise to open the fuel fill cap.

Closing the Fuel Fill Cap

1. After refueling, push the fuel fill cap closed until it locks.
2. Remove the ignition key and close the lock cover.
   ▶ The ignition key cannot be removed if the fuel fill cap is not locked.

⚠WARNING

Gasoline is highly flammable and explosive. You can be burned or seriously injured when handling fuel.

- Stop the engine, and keep heat, sparks, and flames away.
- Only handle fuel outdoors.
- Wipe up spills immediately.

Storage Equipment

Document bag is located under the seat.
Tool kit is in the tool box behind the left side cover.

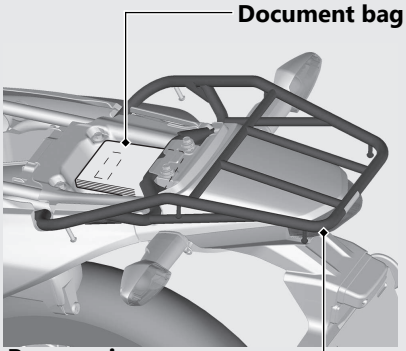

Never exceed the maximum weight limit.
Maximum Weight: 11.0 lb (5.0 kg)

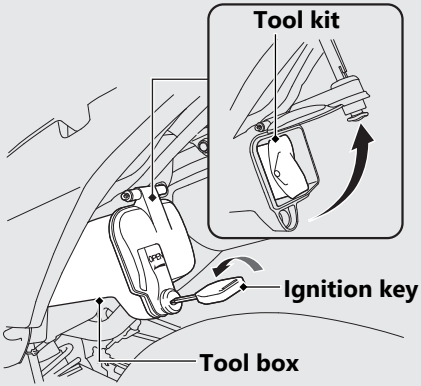

▶ Insert the ignition key and turn it counterclockwise to unlock.

Removing the Seat P.56

Helmet holder is located below the left side cover.

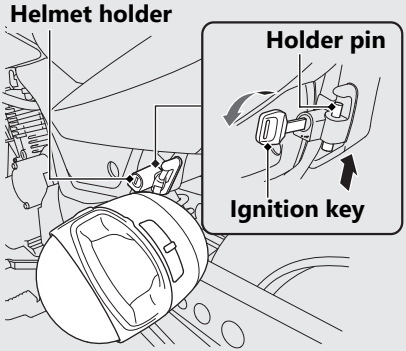

Unlocking

Insert the ignition key and turn it counterclockwise.

Locking

1. Hang your helmet on the holder pin and push it in to lock.
2. Remove the ignition key.
   ▶ Use the helmet holder only when parked.

⚠WARNING

Riding with a helmet attached to the holder can interfere with the rear wheel or suspension and could cause a crash in which you can be seriously hurt or killed.

Use the helmet holder only while parked. Do not ride with a helmet secured by the holder.

Maintenance

Please read “Importance of Maintenance” and “Maintenance Fundamentals” carefully before attempting any maintenance. Refer to “Specifications” for service data.
An optional larger tool kit may be available.
Check with your Honda dealer's parts department.

Importance of Maintenance ..... P. 33
Maintenance Schedule ..... P. 35
Maintenance Record ..... P. 38
Maintenance Fundamentals ..... P. 39
Removing & Installing Body Components .. P. 55
- Battery ..... P. 55
- Seat ..... P. 56
- Side Cover ..... P. 57

Spark Arrester ..... P. 58
Engine Oil ..... P. 60
Brakes ..... P. 62
Side Stand ..... P. 70
Drive Chain ..... P. 71
Wheels ..... P. 73
Clutch ..... P. 74
Throttle ..... P. 77

Importance of Maintenance

Keeping your vehicle well-maintained is absolutely essential to your safety and to protect your investment, obtain maximum performance, avoid breakdowns, and reduce air pollution. Maintenance is the owner's responsibility. Be sure to inspect your vehicle before each ride and perform the periodic checks specified in the Maintenance Schedule. ➔ P. 35

⚠WARNING

Improperly maintaining your vehicle or failing to correct a problem before you ride can cause a crash in which you can be seriously hurt or killed.

Always follow the inspection and maintenance recommendations and schedules in this owner's manual.

For information about the exhaust emission and noise emission requirements of the U.S. Environmental Protection Agency (EPA), the California Air Resources Board (CARB), and the Environment and Climate Change Canada (ECCC). ➔ P. 99

USA

Maintenance, replacement or repair of the emission control devices and systems may be performed by any vehicle repair establishment or individual using parts that are "certified" to EPA standards.

Maintenance Safety

Always read the maintenance instructions before you begin each task and make sure that you have the tools, parts, and skills required. We cannot warn you of every conceivable hazard that can arise in performing maintenance. Only you can decide whether or not you should perform a given task.

Follow these guidelines when performing maintenance.

- Stop the engine and remove the key.
- Place your vehicle on a firm, level surface using the side stand or a maintenance stand to provide support.
- Allow the engine, muffler, brakes, and other high-temperature parts to cool before servicing as you can get burned.
- Run the engine only when instructed, and do so in a well-ventilated area.

Maintenance Schedule

The maintenance schedule specifies the maintenance requirements necessary to ensure safe, dependable performance and proper emission control.

Maintenance work should be performed in accordance with Honda's standards and specifications by properly trained and equipped technicians. Your dealer meets all of these requirements. All scheduled maintenance is considered a normal owner operating cost and will be charged to you by your dealer. Keeping an accurate maintenance record will help ensure your vehicle is properly maintained.
➔ P. 38

Make sure whoever performs the scheduled maintenance completes the maintenance record. Retain all service documents. If you sell your vehicle, these service documents should be transferred with the vehicle to the new owner.

Continued

	Items		Frequency*1								Refer to page
			× 1,000 mi	0.6	2.5	5	7.5	10	12.5	15	
			× 1,000 km	1	4	8	12	16	20	24	
EM	Fuel Line				I	I	I	I	I	I	–
EM	Fuel Strainer Screen				C	C	C	C	C	C	–
EM	Throttle Operation				I	I	I	I	I	I	77
EM	Air Cleaner*2							R			–
EM	Crankcase Breather*3				C	C	C	C	C	C	49
EM	Spark Plug				I	R	I	R	I	R	–
EM	Valve Clearance			I	I	I	I	I	I	I	–
EM	Engine Oil			Initial = 600 mi (1,000 km) or 1 month: R Regular = Every 2,500 mi (4,000 km) or 6 months: R							60
EM	Engine Oil Strainer Screen						C			C	–
EM	Engine Oil Centrifugal Filter						C			C	–
EM	Engine Idle Speed			I	I	I	I	I	I	I	–
EM	Secondary Air Supply System						I			I	–
EM	Secondary Air Supply PAIR Filter*6									R	–
EM	Evaporative Emission Control System*4						I			I	–

Maintenance Level

: Intermediate. We recommend service by your dealer, unless you have the necessary tools and are mechanically skilled.
Procedures are provided in an official Honda Service Manual (P. 105).

: Technical. In the interest of safety, have your vehicle serviced by your dealer.

Emission-Related Maintenance

EM : Emission-Related Items

Maintenance Legend

I : Inspect (clean, adjust, lubricate, or replace, if necessary)
L : Lubricate
R : Replace
C : Clean

Items		Frequency*1								Refer to page
		× 1,000 mi	0.6	2.5	5	7.5	10	12.5	15	
		× 1,000 km	1	4	8	12	16	20	24	
Drive Chain*5			Every 500 mi (800 km): I, L							71
Drive Chain Slider				I	I	I	I	I	I	72
Brake Fluid*7				I	I	I	I	I	I	62
Brake Shoes/Pads Wear				I	I	I	I	I	I	63, 68
Brake System			I	I	I	I	I	I	I	39
Brake Light Switch				I	I	I	I	I	I	69
Headlight Aim				I	I	I	I	I	I	–
Clutch System			I	I	I	I	I	I	I	74
Side Stand				I	I	I	I	I	I	70
Suspension				I	I	I	I	I	I	–
Spark Arrester				C	C	C	C	C	C	58
Nuts, Bolts, Fasteners*5			I		I		I		I	–
Wheels/Tires*5			I	I	I	I	I	I	I	73
Steering Head Bearings			I			I			I	–

Notes:

*1 : At higher odometer reading, repeat at the frequency interval established here.
*2 : Service more frequently when riding in unusually wet or dusty areas.
*3 : Service more frequently when riding in rain or at full throttle.
*4 : 50 STATE (meets California).
*5 : Service more frequently when riding OFF-ROAD.
*6 : Replace every 3 years. Replacement requires mechanical skill.
*7 : Replace every 2 years. Replacement requires mechanical skill.

Maintenance Record

Distance	Odometer	Date	Performed By:	Notes
600 miles (1,000 km)				
2,500 miles (4,000 km)				
5,000 miles (8,000 km)				
7,500 miles (12,000 km)				
10,000 miles (16,000 km)				
12,500 miles (20,000 km)				
15,000 miles (24,000 km)				
17,500 miles (28,000 km)				
20,000 miles (32,000 km)				
22,500 miles (36,000 km)				
25,000 miles (40,000 km)				
27,500 miles (44,000 km)				
30,000 miles (48,000 km)				
52,000 miles (83,200 km)				
56,000 miles (89,600 km)				
60,000 miles (96,000 km)				
64,000 miles (102,400 km)				
68,000 miles (108,800 km)				

Pre-ride Inspection

To ensure safety, it is your responsibility to perform a pre-ride inspection and make sure that any problem you find is corrected. A pre-ride inspection is a must, not only for safety, but because having a breakdown, or even a flat tire, can be a major inconvenience.

Before riding on-road, or returning to pavement after riding off-road, take a few moments to walk around your vehicle and look for any loose parts or anything that appears unusual.
Also check the following.

- Tire tread wear and air pressures are within limits. ➔ P. 50
- Lights, horn, and turn signals operate normally.
- Check the condition of the drive chain. Adjust slack and lubricate as needed. ➔ P. 48

Check the following items if you are carrying a passenger or cargo:

- Combined weight is within load limits. ➔ P. 113
- Cargo is secured properly.

Check the following items after you get on your vehicle:

- Throttle action moves smoothly without binding. ➔ P. 77
- Brake lever and pedal operate normally.
- Refuel when needed. ➔ P. 12, ➔ P. 28
- Engine stop switch functions properly. ➔ P. 20

Continued

Check the following items at regular intervals:

- Oil level is between the upper and lower level marks. ➔ P. 60
- Brake fluid level is above the LOWER level mark. ➔ P. 62
- Side stand functions properly. ➔ P. 70

Before riding off-road check all of the preceding plus the following:

- Make sure spokes are tight. Check the rims for any damage. ➔ P. 73
- Oil level is between the upper and lower marks. ➔ P. 60
- Refuel when needed. ➔ P. 12 ➔ P. 28
- Be sure the fuel fill cap is securely fastened. ➔ P. 28
- Clutch lever operates smoothly. Adjust freeplay if necessary. ➔ P. 74
- Check for loose cables and other parts, and anything that appears abnormal.
- Use a wrench to check the tightness of all accessible nuts, bolts and fasteners.

Periodic Checks

You should also perform other periodic maintenance checks at least once a month regardless of how often you ride, or more often if you ride frequently.

Also, check the odometer reading against the Maintenance Schedule and perform all maintenance that is due. ➡ P. 35

Tires and wheels	Check the air pressure (➡ P. 50), examine tread for wear and damage (➡ P. 50), and check the wheels for damage.
Fluid levels	Check the engine oil level (➡ P. 60) and brake fluid level (➡ P. 62).
Lights	Check that the headlight, brake light, taillight, turn signals, and license plate light are working properly.
Controls	Check the freeplay of the clutch lever (➡ P. 74) , throttle grip (➡ P. 77) and brake pedal (➡ P. 65).
Drive chain	Check the slack (➡ P. 71), adjust the slack, and lubricate (➡ P. 49) as needed.
Fuses	Check that you have a full supply of spare fuses.
Nuts & bolts	Check the major nuts and bolts, and tighten as needed.
Crankcase Breather	Service the crankcase breather more frequently if your vehicle is ridden in the rain or often at full throttle. Service the breather if you can see deposits in the transparent section of the drain tube.

Replacing Parts

Always use Honda Genuine Parts or their equivalents to ensure reliability and safety.
When ordering colored components, specify the model name, color, and code mentioned on the color label.
The color label is attached to the left side of the frame.

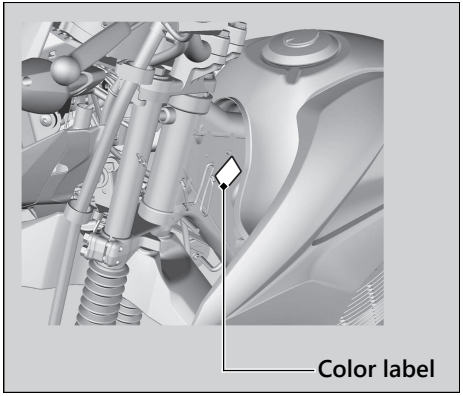

⚠WARNING

Installing non-Honda parts may make your vehicle unsafe and cause a crash in which you can be seriously hurt or killed.

Always use Honda Genuine Parts or equivalents that have been designed and approved for your vehicle.

Battery

Your vehicle has a maintenance-free type battery. You do not have to check the battery electrolyte level or add distilled water. Clean the battery terminals if they become dirty or corroded.
Do not remove the battery cap seals. There is no need to remove the cap when charging.

This symbol on the battery means that this product must not be treated as household waste.

NOTICE
An improperly disposed of battery can be harmful to the environment and human health. Always confirm local regulations for proper battery disposal instruction.

Continued

What to do in an emergency

If any of the following occur, immediately see your doctor.

- Electrolyte splashes into your eyes:
  - ▶ Wash your eyes repeatedly with cool water for at least 15 minutes. Using water under pressure can damage your eyes.
- Electrolyte splashes onto your skin:
  - ▶ Remove affected clothing and wash your skin thoroughly using water.
- Electrolyte splashes into your mouth:
  - ▶ Rinse mouth thoroughly with water, and do not swallow.

⚠WARNING

The battery gives off explosive hydrogen gas during normal operation.

A spark or flame can cause the battery to explode with enough force to kill or seriously hurt you.

Wear protective clothing and a face shield, or have a skilled mechanic do the battery servicing.

WARNING: Battery posts, terminals, and related accessories contain lead and lead compounds. **Wash your hands after handling.**

Cleaning the Battery Terminals

1. Remove the battery. ➡ P. 55
2. If the terminals are starting to corrode and are coated with a white substance, wash with warm water and wipe clean.
3. If the terminals are heavily corroded, clean and polish the terminals with a wire brush or sandpaper. Wear safety glasses.

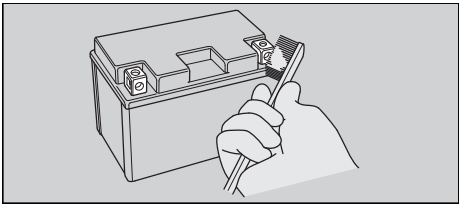

4. After cleaning, reinstall the battery.

The battery has a limited life span. Consult your dealer about when you should replace the battery. Always replace the battery with another maintenance-free battery of the same type.

Charging

If you use electrical accessories that drain the battery or you do not ride frequently, we recommend that you charge the battery every 30 days using a charger designed specifically for your Honda, which can be purchased from your dealer. Read the information that came with your battery charger and follow the instructions on the battery. Avoid using an automobile-type battery charger, as these can overheat a motorcycle battery and cause permanent damage.

Make sure the ignition switch is in the OFF position before charging the battery.

NOTICE

Improper charging can damage the battery. If you can't charge the battery or it appears unable to hold a charge, contact your dealer.

Continued

NOTICE
Jump starting using an automobile battery can damage your vehicle's electrical system and is not recommended. Bump starting is also not recommended.

NOTICE
Installing non-Honda electrical accessories can overload the electrical system, discharging the battery and possibly damaging the system.

Fuses

Fuses protect the electrical circuits on your vehicle. If something electrical on your vehicle stops working, check for and replace any blown fuses. ➡ P. 87

Inspecting and Replacing Fuses

Turn the ignition switch to the OFF position to remove and inspect fuses. If a fuse is blown, replace with a fuse of the same rating. For fuse ratings, see "Specifications." ➡ P. 115

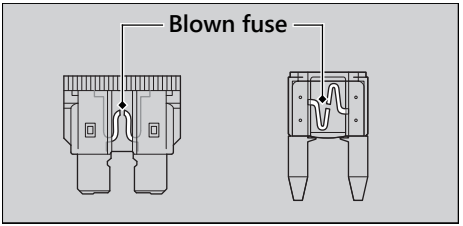

NOTICE
Replacing a fuse with one that has a higher rating greatly increases the chance of damage to the electrical system.

If a fuse fails repeatedly, you likely have an electrical fault. Have your vehicle inspected by your dealer.

Engine Oil

Engine oil consumption varies and oil quality deteriorates according to riding conditions and time elapsed.
Check the engine oil level regularly, and add the recommended engine oil if necessary. Dirty oil or old oil should be changed as soon as possible.

Selecting the Engine Oil

For recommended engine oil, see "Specifications." ➡ P. 114

If you use non-Honda engine oil, check the label to make sure that the oil satisfies all of the following standards:

- JASO T 903 standard*1: MA
- SAE standard*2: 10W-30
- API classification*3: SJ or higher

*1. The JASO T 903 standard is an index for engine oils for 4-stroke motorcycle engines. There are two classes: MA and MB. For example, the following label shows the MA classification.

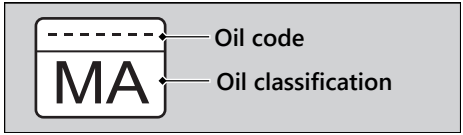

*2. The SAE standard grades oils by their viscosity.

*3. The API classification specifies the quality and performance rating of engine oils. Use SJ or higher oils, excluding oils marked as "Energy Conserving" or "Resource Conserving" on the circular API service symbol.

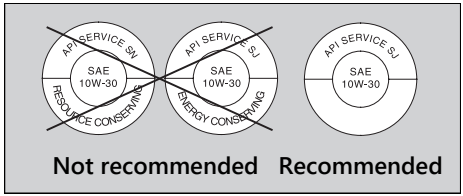

Brake Fluid

Do not add or replace brake fluid, except in an emergency. Use only fresh brake fluid from a sealed container. If you do add fluid, have the brake system serviced by your dealer as soon as possible.

NOTICE
Brake fluid can damage plastic and painted surfaces.
Wipe up spills immediately and wash thoroughly.

Recommended brake fluid:
Honda DOT 3 or DOT 4 Brake Fluid or equivalent

⚠WARNING

Clean filler cap before removing. Use only DOT 3 or DOT 4 fluid from a sealed container.

Drive Chain

The drive chain must be inspected and lubricated regularly. Inspect the chain more frequently if you often ride on bad roads, ride at high speed, or ride with repeated fast acceleration. ➔ P. 71
If the chain does not move smoothly, makes strange noises, has damaged rollers, has loose pins, has missing O-rings, or has kinks, have the chain inspected by your dealer.

Also inspect the drive sprocket and driven sprocket. If either has worn or damaged teeth, have the sprocket replaced by your dealer.

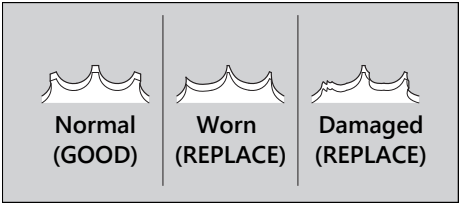

NOTICE
Use of a new chain with worn sprockets will cause rapid chain wear.

Cleaning and Lubricating

After inspecting the slack, clean the chain and sprockets while rotating the rear wheel. Use a dry cloth with chain cleaner designed specifically for O-ring chains, or neutral detergent. Use a soft brush if the chain is dirty. After cleaning, wipe dry and lubricate with the recommended lubricant.

Recommended lubricant:
Pro Honda HP Chain Lube or equivalent

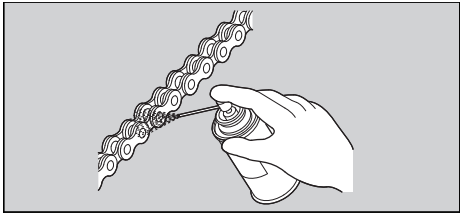

Do not use a steam cleaner, a high pressure cleaner, a wire brush, volatile solvent such as gasoline and benzene, abrasive cleaner, chain cleaner or lubricant NOT designed specifically for O-ring chains as these can damage the rubber O-ring seals.
Avoid getting lubricant on the brakes or tires.
Avoid applying excess chain lubricant to prevent spray onto your clothes and the vehicle.

Crankcase Breather

Service more frequently when riding in rain, at full throttle, or after the vehicle is washed or overturned. Service if the deposit level can be seen in the transparent section of the drain tube.
If the drain tube overflows, the air filter may become contaminated with engine oil, causing poor engine performance.

Tires (Inspecting/Replacing)

Checking the Air Pressure

Visually inspect your tires and use an air pressure gauge to measure the air pressure before each off-road ride and whenever you return to pavement after riding off-road. If you only ride on pavement, check the pressure at least once a month or any time you think the tires look low. Always check air pressure when your tires are cold.

If you decide to adjust the tire pressure for a particular off-road riding condition, make changes a little at a time.

Inspecting for Damage

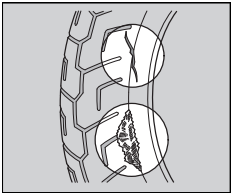

Inspect the tires for cuts, slits, or cracks that expose fabric or cords, or nails or other foreign objects embedded in the side of the tire or the tread.

Also inspect for any unusual bumps or bulges in the side walls of the tires.

Inspecting for Abnormal Wear

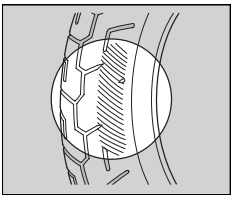

Inspect the tires for signs of abnormal wear on the contact surface.

Inspecting Tread Depth

Inspect the tread wear indicators. If they become visible, replace the tires immediately. For safe riding, you should replace the tires when the minimum tread depth is reached.

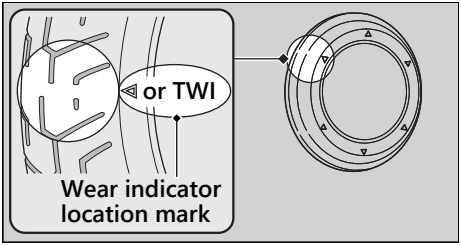

Inspecting Rims and Valve Stems

Inspect the rims for damage and loose spokes. Also inspect the valve stems for their positions. A tilted valve stem indicates the tube is slipping inside the tire or the tire is slipping on the rim. See your dealer.

⚠WARNING

Riding on tires that are excessively worn or improperly inflated can cause a crash in which you can be seriously hurt or killed.

Follow all instructions in this owner's manual regarding tire inflation and maintenance.

Continued

Have your tires replaced by your dealer.
For recommended tires, air pressure, and minimum tread depth, see “Specifications.”
➔ P. 114
Follow these guidelines whenever you replace tires:

- Use the recommended tires or their equivalents of the same size, construction, speed rating, and load range.
- Remember to replace the inner tube whenever you replace a tire. The old tube will probably be stretched, and it could fail if installed in a new tire.

⚠WARNING

Installing improper tires on your vehicle can adversely affect handling and stability, and can cause a crash in which you can be seriously hurt or killed.

Always use the size and type of tires recommended in this owner's manual.

Tire Service Life

The service life of your tires is dependent on many factors, including, but not limited to, riding habits, road conditions, vehicle loading, tire air pressure, maintenance history, speed, and environmental conditions (even when the tires are not in use).

In addition to your regular inspections and maintenance, it is recommended that you have annual inspections performed once the tires reach 5 years old. It is also recommended that all tires be removed from service after 10 years from the date of manufacture, regardless of their condition or state of wear.

The last four digits of the TIN (tire identification number) indicate the date of manufacture.

Continued

Tire Identification Number (TIN)

The tire identification number (TIN) is a group of numbers and letters located on the sidewall of the tire.
There are two different formats that TIN may be listed in.

Format A

① ② ③

DOT XXXX XXXX 20 24

DOT: This indicates that the tire meets all requirements of the U.S. Department of Transportation.

① XXXX: Manufacturer's identification mark

② XXXX: Tire type code

③ 20 24: Date of manufacture (week & year). Example: week 20 in year 24.

Format B

① ② ③

DOT XXX XXXXXX 20 24

DOT: This indicates that the tire meets all requirements of the U.S. Department of Transportation.

① XXX: Plant code

② XXXXXX: Manufacturer's code

③ 20 24: Date of manufacture (week & year). Example: week 20 in year 24.

Tire Labeling Example

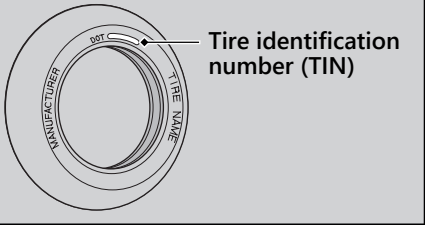

Battery

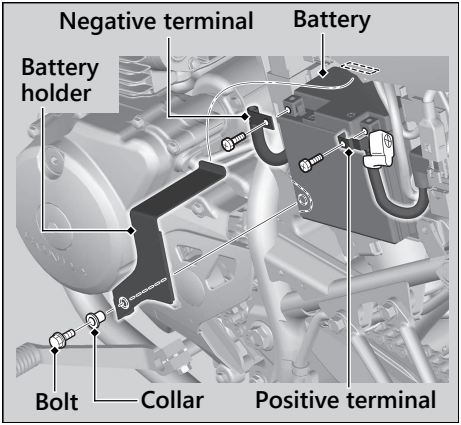

Removal

Make sure the ignition switch is in the OFF position.

1. Remove the left side cover. ➡ P. 57
2. Remove the bolt and collar.
3. Remove the battery holder.
4. Disconnect the negative ⊖ terminal from the battery.
5. Disconnect the positive ⊕ terminal from the battery.
6. Remove the battery, taking care not to drop the terminal nuts.

Installation

Install the parts in the reverse order of removal. Always connect the positive ⊕ terminal first. Make sure bolts and nuts are tight.

For proper handling of the battery, see

"Maintenance Fundamentals." ➡ P. 43
"Battery Goes Dead." ➡ P. 81

Seat

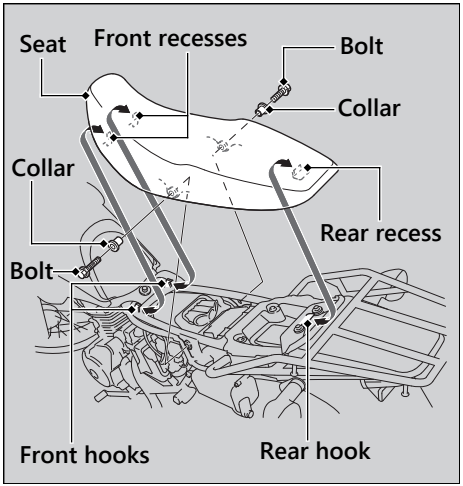

Removal

1. Remove both side covers. P. 57
2. Remove the bolts and collars.
3. Pull the seat back and up.

Installation

1. Align the front recesses to the front hooks and rear recess to the rear hook.
2. Slide the seat into position.
3. Install the collars and tighten the bolts.
4. Install both side covers.

Side Cover

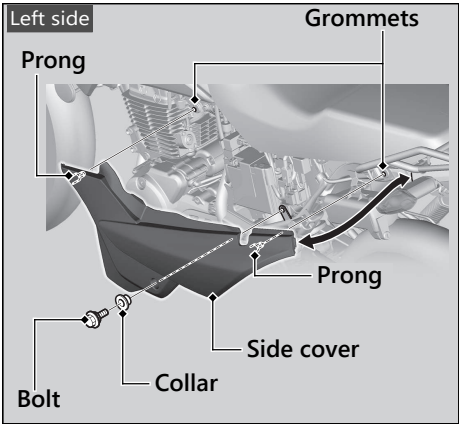

The right and left side covers can be removed in the same manner.

Removal

1. Remove the bolt and collar.
2. Remove the prongs from the grommets.
3. Remove the side cover.

Installation

Install the parts in the reverse order of removal.

Cleaning the Spark Arrester

Regular servicing prevents carbon buildup (which can diminish engine performance) and also complies with USDA regulations for regular maintenance to assure proper function. The spark arrester prevents random sparks from the combustion process in your engine from reaching the environment.

▶ Because of possible fire hazard, do not ride with the spark arrester removed. Riding with the spark arrester removed will also damage the surrounding parts.

1. Allow the engine and muffler to cool.
2. Remove the tail cap by removing the tail cap mounting bolts from the muffler.
3. Remove the spark arrester mounting bolts, spark arrester, and gasket from the muffler.

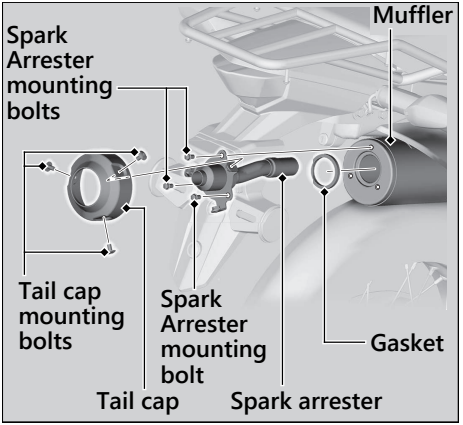

4. Use a brush to remove carbon deposits from the spark arrester screen. Be careful to avoid damaging the spark arrester screen. The spark arrester must be free of breaks and holes. Replace, if necessary. Check the gasket. Replace, if necessary.

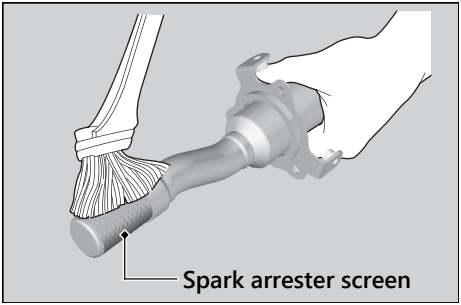

5. Install the gasket and the spark arrester, and tighten the spark arrester mounting bolts.

Torque: 7 lbf·ft (10 N·m, 1.0 kgf·m)

6. Install the tail cap and tighten the tail cap mounting bolts.

Torque: 7 lbf·ft (10 N·m, 1.0 kgf·m)

Checking the Engine Oil

1. If the engine is cold, idle the engine for 3 to 5 minutes.
2. Turn the ignition switch to the OFF position and wait for 2 to 3 minutes.
3. Place your vehicle in an upright position on a firm, level surface.
4. Remove the oil fill cap/dipstick and wipe it clean.
5. Insert the oil fill cap/dipstick until it seats, but don't screw it in.
6. Check that the oil level is between the upper level and lower level marks on the oil fill cap/dipstick.
7. Securely install the oil fill cap/dipstick.

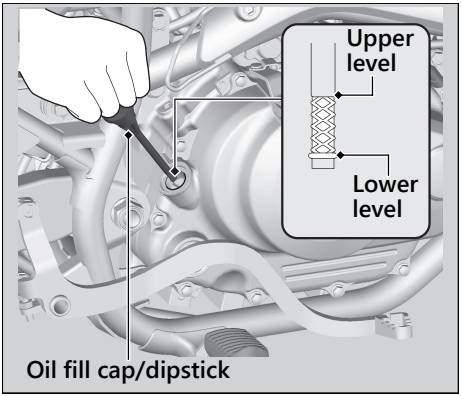

Adding Engine Oil

If the engine oil is below or near the lower level mark, add the recommended engine oil.
➡ P. 47, ➡ P. 114

1. Remove the oil fill cap/dipstick. Add the recommended oil until it reaches the upper level mark.
   - ▶ Place your vehicle in an upright position on a firm, level surface when checking the oil level.
   - ▶ Do not overfill above the upper level mark.
   - ▶ Make sure no foreign objects enter the oil filler opening.
   - ▶ Wipe up any spills immediately.
2. Securely reinstall the oil fill cap/dipstick.

NOTICE
Overfilling with oil or operating with insufficient oil can cause damage to your engine. Do not mix different brands and grades of oil. They may affect lubrication and clutch operation.

For the recommended oil and oil selection guidelines, see “Maintenance Fundamentals.”
➡ P. 47

Checking the Front Brake Fluid

1. Place your vehicle in an upright position on a firm, level surface.
2. Check that the brake fluid reservoir is horizontal and that the fluid level is above the LOWER level mark.

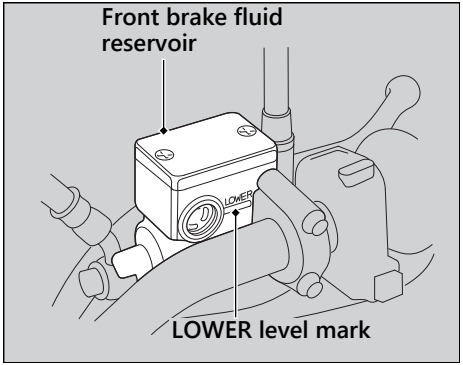

If the brake fluid level in the reservoir is below the LOWER level mark or the brake lever freeplay becomes excessive, inspect the brake pads for wear.
If the brake pads are not worn, you most likely have a leak. Have your vehicle inspected by your dealer.

Inspecting the Front Brake Pads

Check the condition of the brake pad wear indicators.
The pads need to be replaced if a brake pad is worn to the bottom of the indicator.

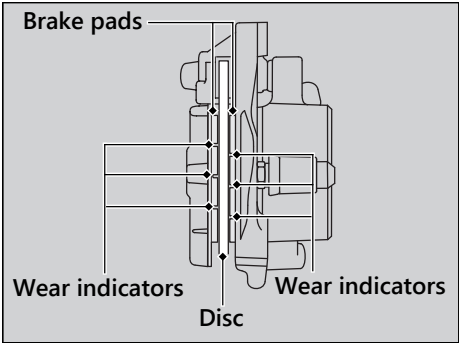

1. Inspect the brake pads from in front of the brake caliper.

If necessary, have the pads replaced by your dealer.
Always replace both left and right brake pads at the same time.

Adjusting the Rear Brake Pedal Height

The stopper bolt is provided to allow adjustment of the pedal height.

1. Place your vehicle on its side stand on a firm, level surface.
2. Loosen the lock nut and turn the stopper bolt.
3. Tighten the lock nut and check the freeplay.

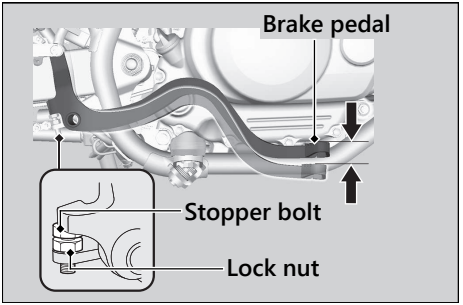

Inspecting the Rear Brake Pedal Freeplay

1. Place your vehicle on its side stand on a firm, level surface.
2. Measure the distance the rear brake pedal moves before the brake takes hold.

Freeplay at the tip of the brake pedal:
9/16 - 1 in (15 - 25 mm)

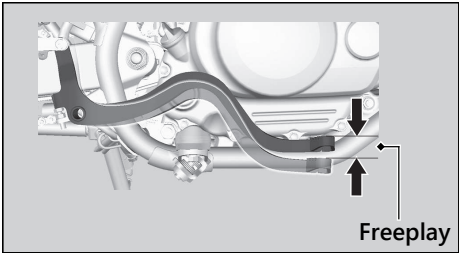

Make sure the brake rod, brake arm, spring and fastener are in good condition.

Adjusting the Rear Brake Pedal Freeplay

Make sure the cut-out on the adjusting nut is seated on the brake arm pin when adjusting the freeplay.

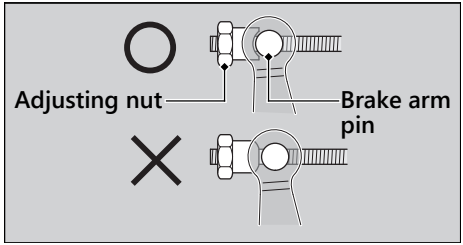

If proper adjustment cannot be obtained by this method, see your dealer.

Continued

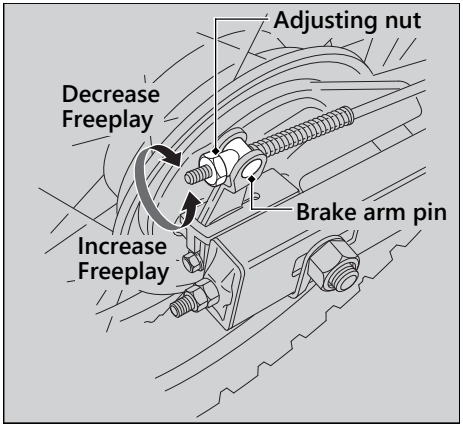

1. Adjust by turning the rear brake adjusting nut a half-turn at a time.
2. Apply the brake several times and check for free wheel rotation after the brake pedal is released.

3. Push the brake arm to confirm that there is a gap between the rear brake adjusting nut and brake arm pin.

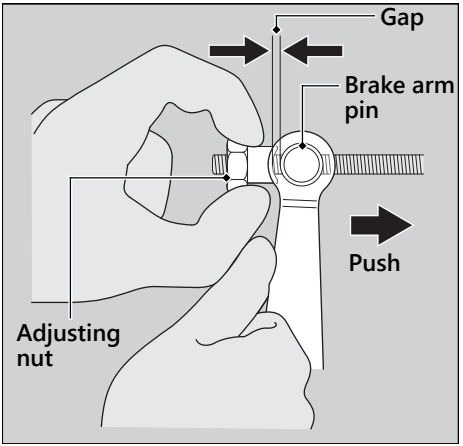

After adjustment, confirm the freeplay of the brake pedal.
Make sure the brake rod, brake arm, spring and fastener are in good condition.

NOTICE
Do not turn the adjuster beyond its natural limits.

Inspecting the Rear Brake Shoe Wear

The rear brake is equipped with a brake wear indicator.

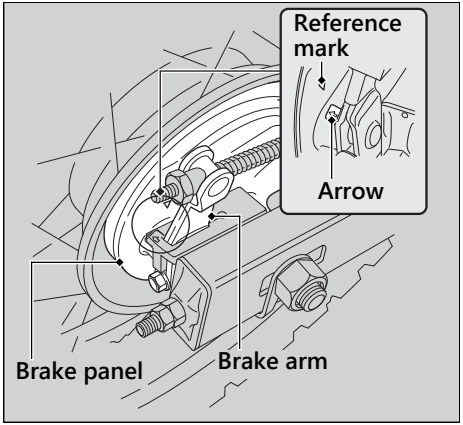

When the brake is applied, an arrow attached to the brake arm moves toward a reference mark on the brake panel. If the arrow aligns with the reference mark on full application of the brake, the brake shoes must be replaced. See your dealer for this service.

When brake service is necessary, see your dealer. Use only Honda Genuine Parts or their equivalent.

Adjusting the Brake Light Switch

Check the operation of the brake light switch. Hold the brake light switch and turn the adjusting nut in the direction A if the switch operates too late, or turn the nut in the direction B if the switch operates too soon.

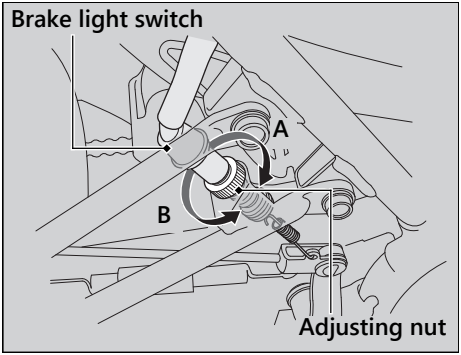

Checking the Side Stand

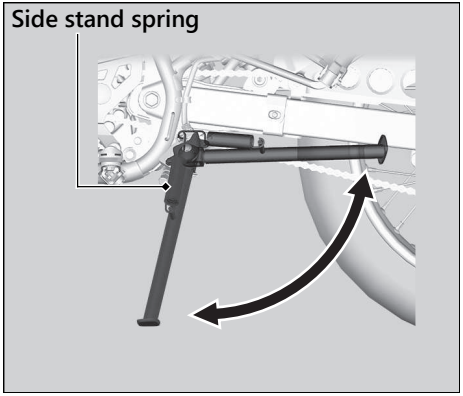

1. Check that the side stand operates smoothly. If the side stand is stiff or squeaky, clean the pivot area and lubricate the pivot bolt with clean grease.
2. Check the spring for damage or loss of tension.
3. Sit on the vehicle, shift the transmission to Neutral, and raise the side stand.
4. Start the engine, pull the clutch lever in, and shift the transmission into gear.
5. Lower the side stand all the way. The engine should stop as you lower the side stand. If the engine doesn't stop, have your vehicle inspected by your dealer.

Inspecting the Drive Chain Slack

Check the drive chain slack at several points along the chain. If the slack is not constant at all points, some links may be kinked and binding.
Have the chain inspected by your dealer.

1. Shift the transmission to Neutral. Stop the engine.
2. Place your vehicle on its side stand on a firm, level surface.
3. Move the lower part of the drive chain up and down to check chain slack, midway between the sprockets.

Drive chain slack:
13/16 - 1 3/16 in (20 - 30 mm)

▶ Do not ride your vehicle if the slack exceeds 2 3/8 in (60 mm).

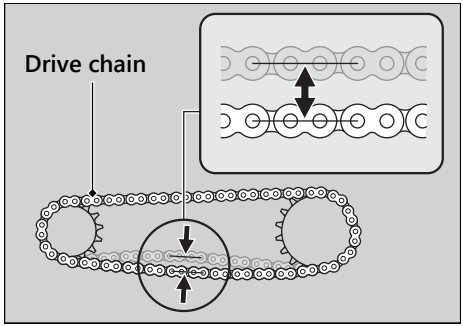

4. Roll the vehicle forward and check that the chain moves smoothly.
5. Inspect the sprockets. ➡ P. 48
6. Clean and lubricate the drive chain. ➡ P. 49

Checking the Drive Chain Slider

Check the condition of the drive chain slider. The drive chain slider will need to be replaced if the chain slider is worn to the wear limit point.
If necessary, have the drive chain slider replaced by your dealer.

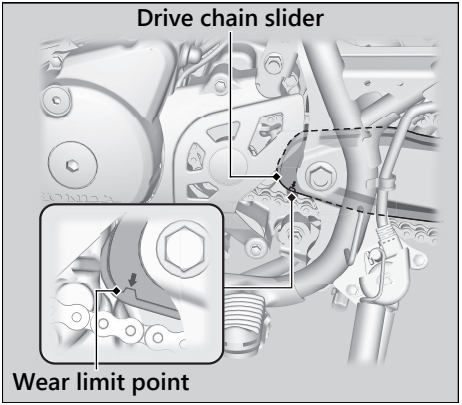

Wheels Rims & Spokes

Keeping the wheels true (round) and maintaining correct spoke tension is critical to safe vehicle operation.
Excessively loose spokes may result in instability at high speeds and possible loss of control.
It is not necessary to remove the wheels to perform the recommended service in the Maintenance Schedule.

1. Inspect the wheel rims and spokes for damage.
2. Tighten any loose spokes.
3. Rotate the wheel slowly to see if it appears to "wobble." If it does, the rim is out of round or not "true." If the wobble is noticeable, see your dealer for inspection.

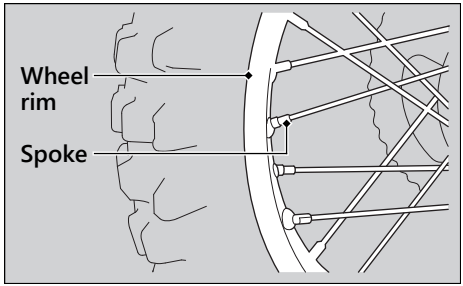

Checking the Clutch

Checking the Clutch Lever Freeplay

Check the clutch lever freeplay.

Freeplay at the clutch lever:
3/8 - 13/16 in (10 - 20 mm)

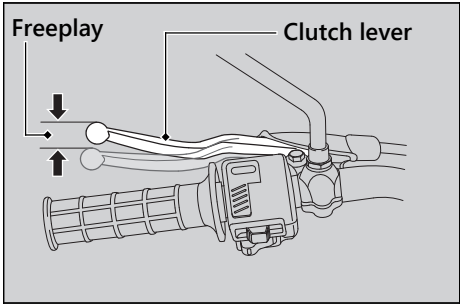

Check the clutch cable for kinks or signs of wear. If necessary, have it replaced by your dealer.
Lubricate the clutch cable with a commercially available cable lubricant to prevent premature wear and corrosion.

NOTICE
Improper freeplay adjustment can cause premature clutch wear.

Adjusting the Clutch Lever Freeplay

Upper Adjustment

Attempt adjustment with the upper clutch cable adjuster first.

1. Pull back the rubber dust cover.
2. Loosen the upper lock nut.
3. Turn the upper clutch cable adjuster until the freeplay is 3/8 - 13/16 in (10 - 20 mm).
4. Tighten the upper lock nut and check the freeplay again.
5. Install the rubber dust cover.

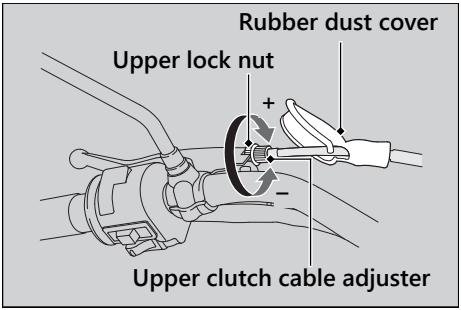

Continued

Lower Adjustment

If the upper clutch cable adjuster is threaded out near its limit, or the correct freeplay cannot be obtained, attempt adjustment with the lower clutch cable adjusting nut.

1. Turn the upper clutch cable adjuster all the way in (to provide maximum freeplay). Tighten the upper lock nut.
2. Loosen the lower lock nut.
3. Turn the lower adjusting nut until the clutch lever freeplay is 3/8 - 13/16 in (10 - 20 mm).
4. Tighten the lower lock nut and check the clutch lever freeplay.
5. Start the engine, pull the clutch lever in, and shift into gear. Make sure the engine does not stall and the vehicle does not creep. Gradually release the clutch lever and open the throttle. Your vehicle should move smoothly and accelerate gradually.

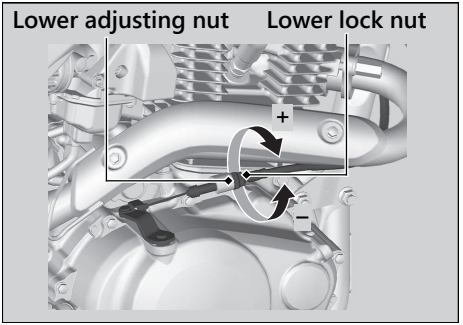

If proper adjustment cannot be obtained or the clutch does not work correctly, see your dealer.

Checking the Throttle

With the engine off, check that the throttle rotates smoothly from fully closed to fully open in all steering positions and throttle freeplay is correct. If the throttle does not move smoothly or close automatically, or if the cable is damaged, have the vehicle inspected by your dealer.

Freeplay at the throttle grip flange:
1/16 - 1/4 in (2 - 6 mm)

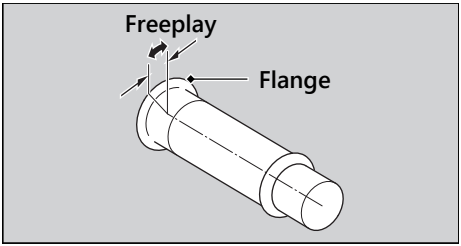

Adjusting the Throttle Freeplay

1. Slide the rubber dust cover.
2. Loosen the lock nut.
3. Turn the adjuster until the freeplay is 1/16 - 1/4 in (2 - 6 mm).
4. Tighten the lock nut, return the rubber dust cover, and inspect the throttle action again.

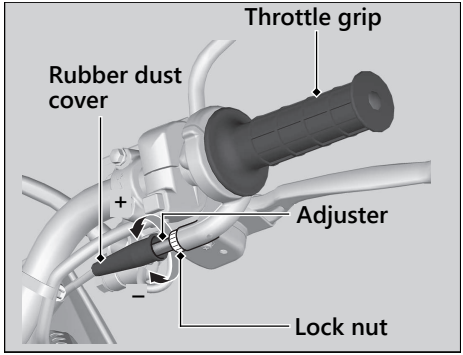

Troubleshooting

Engine Will Not Start ..... P. 79
Tire Puncture ..... P. 80
Electrical Trouble ..... P. 81
Battery Goes Dead ..... P. 81
Burned-out Light Bulb ..... P. 81
Blown Fuse ..... P. 87

Starter Motor Operates But Engine Does Not Start

Check the following items:

- Make sure engine stop switch is in the ◯ (Run) position. ➡ P. 20
- Check the correct engine starting sequence. ➡ P. 24
- Check that there is gasoline in the fuel tank.

Starter Motor Does Not Operate

Check the following items:

- Check the correct engine starting sequence. ➡ P. 24
- Check for a blown fuse. ➡ P. 87
- Check for a loose battery connection (➡ P. 55) or battery terminal corrosion (➡ P. 45).
- Check the condition of the battery. ➡ P. 81

If the problem continues, have your vehicle inspected by your dealer.

Repairing a puncture or removing a wheel requires special tools and technical expertise. We recommend you have this type of service performed by your dealer.
After an emergency repair, always have the tire inspected/replaced by your dealer.

Tube Repair and Replacement

If a tube is punctured or damaged, you should replace it as soon as possible. A tube that is repaired may not have the same reliability as a new one, and it may fail while you are riding.
If you need to make a temporary repair by patching a tube or using an aerosol sealant, ride cautiously at reduced speed and have the tube replaced before you ride again.
Anytime a tube is replaced, the tire should be carefully inspected as described.

⚠WARNING

Riding your vehicle with a temporary tire or tube repair can be risky. If the temporary repair fails, you can crash and be seriously injured or killed.

If you must ride with a temporary tire or tube repair, ride slowly and carefully and do not exceed 30 mph (50 km/h) until the tire or tube is replaced.

Battery Goes Dead

Charge the battery using a motorcycle battery charger.
Remove the battery from the vehicle before charging.

Do not use an automobile-type battery charger, as these can overheat a motorcycle battery and cause permanent damage. If the battery does not recover after recharging, contact your dealer.

NOTICE
Jump starting using an automobile battery can damage your vehicle's electrical system and is not recommended.
Bump starting is also not recommended.

Burned-out Light Bulb

Follow the procedure below to replace a burned-out light bulb.
Turn the ignition switch to the OFF or LOCK position.

Allow the bulb to cool before replacing it.

Do not use bulbs other than those specified.

Check the replacement bulb for correct operation before riding.

For the light bulb wattage, see "Specifications." ➔ P. 115

Headlight Bulb

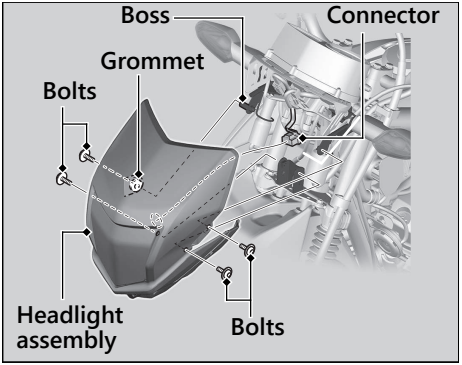

1. Remove the bolts.
2. Remove the headlight assembly by releasing the grommet from the boss.
3. Pull off the connector.

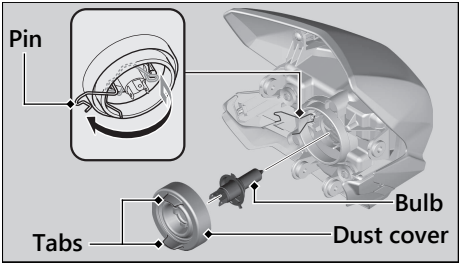

4. Remove the dust cover.
5. Press the pin down and pull out the bulb without turning it.
6. Install a new bulb and dust cover in the reverse order of removal.
   ▶ Install the dust cover with its tabs positioned vertically.

Do not touch the glass surface with your fingers. If you touch the bulb with your bare hands, clean it with a cloth moistened with isopropyl (rubbing) alcohol.

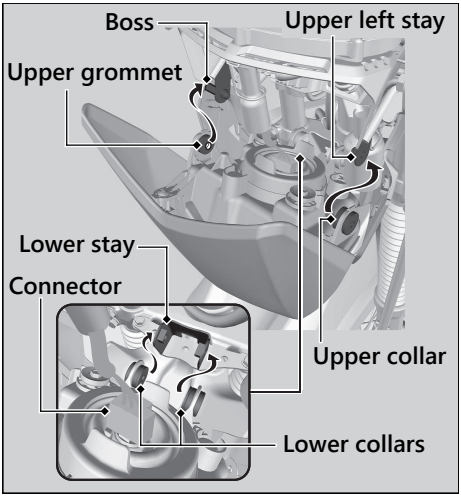

7. Put the headlight assembly and connect the connector.
8. Set the lower collars to the lower stay while holding the lower collars.
9. Set the upper grommet to the boss while holding the left side upper collar.
10. Set the upper collar to the upper left stay.
11. Tighten the bolts securely.

Torque: 6.3 lbf·ft (8.5 N·m, 0.9 kgf·m)

Continued

Brake Light/Taillight bulb

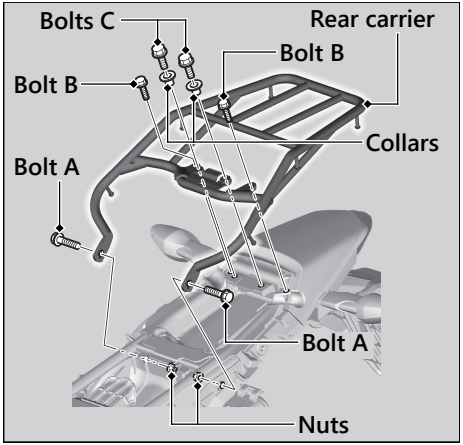

1. Remove the seat ➔ P. 56
2. Remove the bolts A and nuts.
3. Remove the bolts B.
4. Remove the bolts C, collars, and rear carrier.

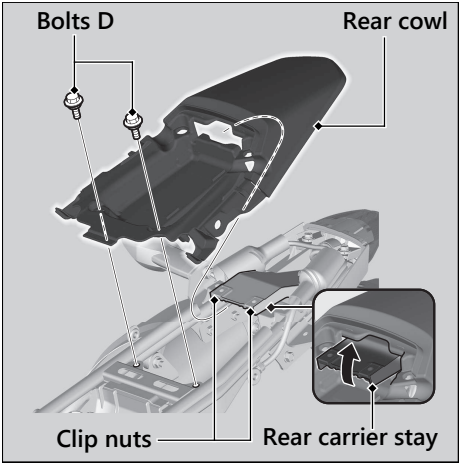

5. Remove the bolts D.
6. Remove the rear cowl while lifting the rear carrier stay.
   ▶ Be careful not to drop the clip nuts.

7. Turn the socket counterclockwise, and remove it.
8. Slightly press the bulb in and turn it counterclockwise.
9. Install a new bulb and socket in the reverse order of removal.

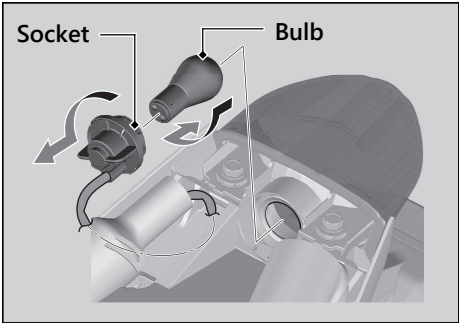

10. Put the rear cowl to the frame.
11. Insert the rear carrier stay to the rear cowl hole while lifting the rear carrier stay from lower side.
12. Install the parts in the reverse order of removal.

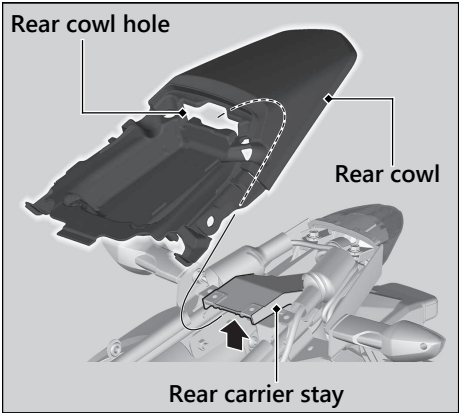

Continued

Front/Rear Turn Signal Bulb

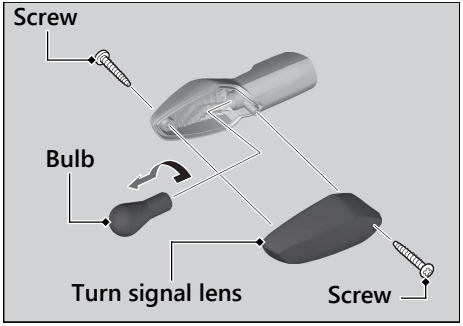

1. Remove the turn signal lens by removing the screws.
2. Slightly press the bulb in and turn it counterclockwise.
3. Install a new bulb and parts in the reverse order of removal.
   ▶ Only use amber bulbs.

License Plate Light Bulb

1. Remove the screws, license light cover and cover packing.
2. Pull out the bulb without turning.

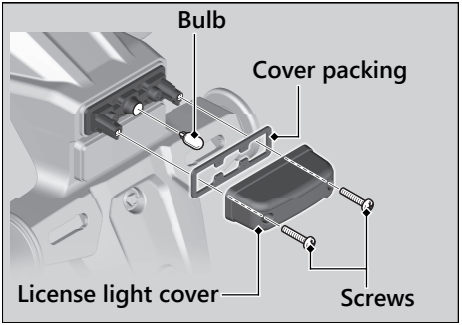

3. Install a new bulb and parts in the reverse order of removal.

Blown Fuse

Before handling fuses, see "Inspecting and Replacing Fuses." ➡ P. 46

Fuse Box Fuses

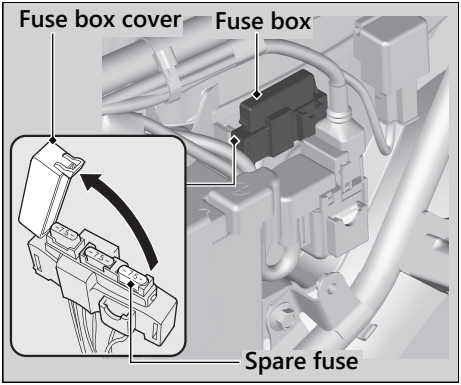

1. Remove the left side cover. ➡ P. 57
2. Open the fuse box cover.
3. Pull out the fuses one by one to check for a blown fuse. Always replace a blown fuse with a spare fuse of the same rating.
4. Close the fuse box cover.
5. Install the parts in the reverse order of removal.

Continued

Main Fuse

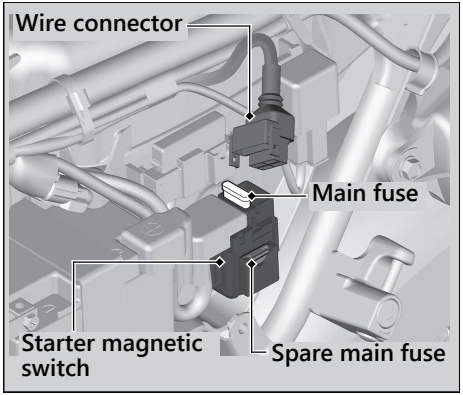

1. Remove the left side cover. ➡ P. 57
2. Disconnect the wire connector of the starter magnetic switch.
3. Pull the main fuse out and check for a blown fuse. Always replace a blown fuse with a spare of the same rating.
   ▶ Spare main fuse is provided in the starter magnetic switch.
4. Install the parts in the reverse order of removal.

NOTICE
If a fuse fails repeatedly, you likely have an electrical problem. Have your vehicle inspected by your dealer.

Information

Keys ..... P. 90
Instruments, Controls, & Other Features ..... P. 91
Caring for Your Vehicle ..... P. 92
Storing Your Vehicle ..... P. 95
Transporting Your Vehicle ..... P. 96
You & the Environment ..... P. 97
Vehicle Identification Number ..... P. 98
Emission Control Systems ..... P. 99
High Altitude Carburetor Adjustment ..... P. 103
Oxygenated Fuels ..... P. 104
Authorized Manuals ..... P. 105
Warranty Coverage and Service ..... P. 106
Honda Contacts ..... P. 109
Reporting Safety Defects ..... P. 111

Keys

Ignition Key

Be sure to record the key number provided with the key number plate. Store the spare key and key number in a safe location.
To make a duplicate, take the spare key or the key number to your dealer.
If you lose all ignition keys and the key number, the ignition switch assembly will probably have to be removed by your dealer to determine the key number.

A metal key holder may cause damage to the area surrounding the ignition switch.

Instruments, Controls, & Other Features

Ignition Switch

Leaving the ignition switch in the ON position with the engine stopped will drain the battery.

Do not turn the key while riding.

Engine Stop Switch

Do not use the engine stop switch except in an emergency. Doing so when riding will cause the engine to suddenly turn off, making riding unsafe.
If you stop the engine using the engine stop switch, turn the ignition switch to the OFF position. Failing to do so will drain the battery.

Odometer

The odometer resets to 0 when the odometer mileage exceeds 99,999.9.

Tripmeter

The tripmeter resets to 0.0 when the trip mileage exceeds 999.9.

Document Bag

The owner's manual, registration, and insurance information can be stored in the plastic document bag located under the seat.

Caring for Your Vehicle

Frequent cleaning and polishing is important to ensure the life of your Honda. A clean vehicle makes it easier to spot potential problems.
In particular, seawater and salts used to prevent ice on roads promote the formation of corrosion. Also, mud and dust may accelerate front suspension wear and cause oil leaks. Always wash your vehicle thoroughly after riding on coastal, treated, muddy, or dusty roads.

Washing

Allow the engine, muffler, brakes, and other high-temperature parts to cool before washing.

1. Rinse your vehicle thoroughly using a low pressure garden hose to remove loose dirt.
2. If necessary, use a sponge or a soft towel with mild cleaner to remove road grime.
   ▶ Clean the headlight lens, panels, and other plastic components with extra care to avoid scratching them. Avoid directing water into the air cleaner, muffler, and electrical parts.
3. Thoroughly rinse your vehicle with plenty of clean water and dry with a soft, clean cloth.
4. After the vehicle dries, lubricate any moving parts.
   ▶ Make sure that no lubricant spills onto the brakes or tyres. Brake discs, pads, drums, or shoes contaminated with oil will suffer greatly reduced braking effectiveness and can lead to a crash.
5. Lubricate the drive chain immediately after washing and drying the vehicle.
6. Apply a coat of wax to prevent corrosion.
   ▶ Avoid products that contain harsh detergents or chemical solvents. These can damage the metal, paint, and plastic on your vehicle.
   Keep the wax clear of the tires and brakes.
   ▶ If your vehicle has any matte painted parts, do not apply a coat of wax to the matte painted surface.

Washing Precautions

Follow these guidelines when washing:

- Do not use high-pressure washers:
  - ▶ High-pressure water cleaners can damage moving parts and electrical parts, rendering them inoperable.
  - ▶ Water in the air intake can be drawn into the carburetor and/or enter the air cleaner.
- Do not direct water at the muffler:
  - ▶ Water in the muffler can prevent starting and causes rust in the muffler.
- Dry the brakes:
  - ▶ Water adversely affects braking effectiveness. After washing, apply the brakes intermittently at low speed to help dry them.
- Do not direct water under the seat:
  - ▶ Water in the under seat compartment can damage your documents and other belongings.
- Do not direct water at the air cleaner:
  - ▶ Water in the air cleaner can prevent the engine from starting.
- Do not direct water near the headlight:
  - ▶ The headlight's inside lens may fog temporarily after washing or while riding in the rain. This does not impact the headlight function.
  - ▶ Any condensation inside the headlight should dissipate after a few minutes of running the engine with the headlight(s) on.
    However, if you see a large amount of water or ice accumulated inside the lens(es), have your vehicle inspected by your dealer.
- Do not use wax or polishing compounds on matte painted surfaces:
  - ▶ Use a soft cloth or sponge, plenty of water, and a mild detergent to clean matte painted surfaces. Dry with a soft clean cloth.

Continued

Aluminum Components

Aluminum will corrode from contact with dirt, mud, or road salt. Clean aluminum parts regularly and follow these guidelines to avoid scratches:

- Do not use stiff brushes, steel wool, or cleaners containing abrasives.
- Avoid riding over or scraping against curbs.

Panels

Follow these guidelines to prevent scratches and blemishes:

- Wash gently using a soft sponge and plenty of water.
- To remove stubborn stains, use diluted detergent and rinse thoroughly with plenty of water.
- Avoid getting gasoline, brake fluid, or detergents on the instruments, panels, or headlight.

Exhaust Pipe and Muffler

If the exhaust pipe and muffler are painted, do not use a commercially available abrasive kitchen cleaning compound. Use a neutral detergent to clean the painted surface on the exhaust pipe and muffler. If you are not sure if your exhaust pipe and muffler are painted, contact your dealer.

Storing Your Vehicle

If you store your vehicle outdoors, you should consider using a full-body cover.
If you won't be riding for an extended period, follow these guidelines:

- Wash your vehicle and wax all painted surfaces (except matte painted surfaces). Coat chrome pieces with rust-inhibiting oil.
- Lubricate the drive chain. ➡ P. 48
- Place your vehicle on a maintenance stand and position a block so that both tires are off the ground.
- After rain, remove the body cover and allow the vehicle to dry.
- Remove the battery (➡ P. 55) to prevent discharge. Fully charge the battery and then place it in a shaded, well-ventilated area.
  ▶ If you leave the battery in place, disconnect the negative ⊖ terminal to prevent discharge.

After removing your vehicle from storage, inspect all maintenance items required by the Maintenance Schedule.

USA For more information about storage, refer to the *Honda Winter Storage Guide*, available from your dealer.

Canada For more information about storage, visit our website at www.honda.ca and look up “Storage Tips” under the “Honda Warranty” in the Warranty tab for your Model.

Transporting Your Vehicle

If your vehicle needs to be transported, it should be carried on a motorcycle trailer or a flatbed truck or trailer that has a loading ramp or lifting platform and motorcycle tie-down straps. Never try to tow your vehicle with a wheel or wheels on the ground.

NOTICE
Towing your vehicle with a wheel or wheels on the ground can cause serious damage to the transmission.

You & the Environment

Owning and riding a vehicle can be enjoyable, but you must do your part to protect the environment.

Choose Sensible Cleaners

Use a biodegradable detergent when you wash your vehicle. Avoid aerosol spray cleaners that contain chlorofluorocarbons (CFCs) which damage the atmosphere's protective ozone layer.

Recycle Wastes

Put oil and other toxic wastes in approved containers and take them to a recycling center. Call your local or state office of public works or environmental services to find a recycling center in your area and to get instructions on how to dispose of non-recyclable wastes. Do not place used engine oil in the trash or pour it down a drain or on the ground. Used oil, gasoline, and cleaning solvents contain poisons that can hurt refuse workers and contaminate drinking water, lakes, rivers, and oceans.

Vehicle Identification Number

The VIN and engine serial number uniquely identify your vehicle and are required in order to register your vehicle. They may also be required when ordering replacement parts. You should record these numbers and keep them in a safe place.

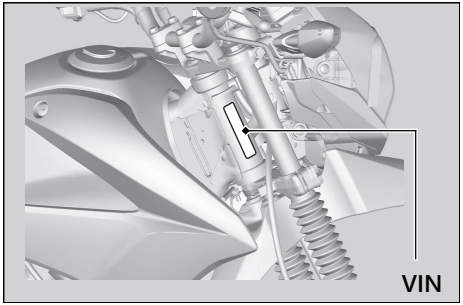

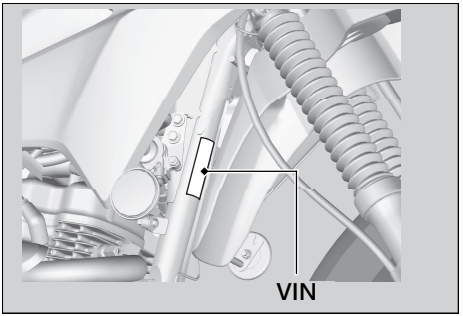

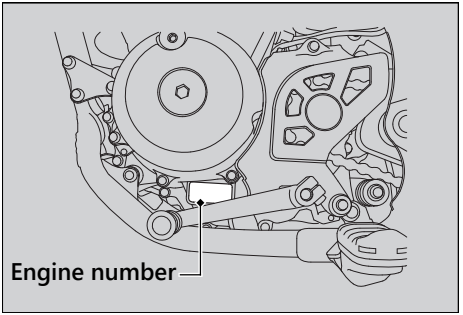

Emission Control Systems

Your vehicle engine emits combustion byproducts, including carbon monoxide (CO), oxides of nitrogen (NOx), and hydrocarbons (HC). Gasoline evaporation also emits hydrocarbons. Controlling the production of NOx, CO, and HC is important for the environment.

Exhaust Emission Requirements

The U.S. Environmental Protection Agency (EPA), the California Air Resources Board (CARB), and Environment and Climate Change Canada (ECCC) require that your vehicle comply with applicable exhaust, crankcase, and fuel permeation emission standards during its useful life, when operated and maintained according to the instructions provided.

CARB also requires that your vehicle comply with applicable evaporative emission requirements during its useful life, when operated and maintained according to the instructions provided.

USA Compliance with the terms of the Distributor's Warranties for Honda Motorcycle Emission Control Systems is necessary in order to maintain a valid emissions system warranty.

The Vehicle Emission Control Information label is attached to the swingarm.

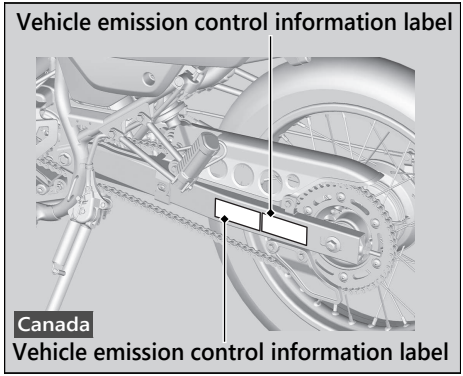

Noise Emission Requirements

The EPA requires that vehicles built after January 1, 1983, comply with applicable noise emission standards for one year or 3,730 miles (6,000 km) after the time of purchase when operated and maintained according to the instructions provided.

Exhaust Emission Control System

The exhaust emission control system consists of appropriate carburetor settings, and no adjustment should be made except idle speed adjustment with the throttle stop screw.

Secondary Air Injection System

The secondary air injection system adds filtered air into the exhaust gas to help improve emission control performance.

Evaporative Emission Control System

50 STATE (meets California)

An evaporative emissions control system uses a canister filled with charcoal to adsorb fuel vapor from the fuel tank and carburetor while the engine is off. The vapor is drawn into the engine and burned while riding.

Crankcase Emissions Control System

The engine is equipped with a closed crankcase system to prevent discharging crankcase emissions into the atmosphere.
Blow-by gas is returned to the combustion chamber through the crankcase breather hose air cleaner housing and carburetor.

Fuel Permeation Emission Control

The fuel tank, fuel hoses, and fuel vapor charge hoses use fuel permeation control technologies to prevent fuel vapor emissions. Tampering with these components to reduce or defeat the effectiveness of the fuel permeation technologies is prohibited.

Noise Emission Control System

TAMPERING WITH THE NOISE CONTROL SYSTEM IS PROHIBITED:

U. S. federal law prohibits, and Canadian provincial laws may prohibit, the following acts or the causing thereof: (1) The removal or rendering inoperative by any person, other than for purposes of maintenance, repair or replacement, of any device or element of design incorporated into any new vehicle for the purpose of noise control prior to its sale or delivery to the ultimate purchaser or while it is in use; or (2) the use of the vehicle after such device or element of design has been removed or rendered inoperative by any person.

Continued

AMONG THOSE ACTS PRESUMED TO CONSTITUTE TAMPERING ARE THE FOLLOWING ACTS:

- Removal of, or puncturing the muffler, baffles, header pipes or any other component which conducts exhaust gases.
- Removal of, or puncturing of any part of the intake system.
- Lack of proper maintenance.
- Removing or disabling any emissions compliance component, or replacing any compliance component with a noncompliant component.

Problems Affecting Vehicle Exhaust Emissions

Have your vehicle inspected and repaired by your dealer if you experience any of the following symptoms:

- Hard starting or stalling after starting.
- Rough idling.
- Misfiring or backfiring during acceleration.
- Poor engine performance and poor fuel economy.

High Altitude Carburetor Adjustment

Your engine's air-fuel mixture becomes overly rich when operated at high altitudes.
Above 6,500 ft (2,000 m), a rich mixture can cause driveability problems, reduce engine performance, and increase fuel consumption. To compensate, you can have the carburetor adjusted for high altitude riding. See your dealer.

However, the carburetor must be returned to standard factory specifications before riding again at lower altitudes (below 5,000 ft (1,500 m)). See your dealer.

Sustained riding at lower altitudes with the lean high-altitude setting may cause rough idling, stalling, or engine damage from overheating.

Oxygenated Fuels

Some conventional fuels blended with alcohol or an ether compound are available in some locales to help reduce emissions to meet clean air standards. These gasolines are collectively referred to as oxygenated fuels. If you plan to use oxygenated fuel, check that it is unleaded and meets the minimum octane rating and blend requirement.

The following fuel blends have been approved for use in your vehicle:

- Ethanol (ethyl alcohol) up to 10% by volume.
  - ▶ Gasoline containing ethanol may be marketed under the name Gasohol.
- Do not use gasoline containing methanol (methyl alcohol).

If you accidentally fill your fuel tank with an oxygenated fuel containing higher percentages, you may experience performance problems. To resolve the problem, have your dealer drain the fuel tank and replace with the correct fuel. Fuel system or performance problems resulting from the use of an oxygenated fuel containing higher percentages are not covered by your warranty.

NOTICE

Improper use of oxygenated fuels can damage metal, rubber, and plastic parts of your fuel system.
Oxygenated fuel can also damage paint.
Damage caused by spilled fuel is not covered by warranty.

If you notice any undesirable operating symptoms or performance problems, try a different brand of gasoline.

Authorized Manuals

USA The Service Manual used by your authorized dealer is available from your Honda dealer or Helm, Inc.
Canada See your dealer to order authorized manuals.

Also available, but not necessary to service your model, is the Honda Common Service Manual, which explains basic service information for various systems on Honda motorcycles, scooters, ATV, and SxS.

USA The Winter Storage Guide in conjunction with the Owner's Manual and Service Manual can help you prepare your Honda motorcycle, scooter, ATV, and SxS for winter storage.

These Honda manuals are written for the professional technician. However, if you possess the proper tools, observe the safety standards, and are mechanically capable, you should find them easy to use.
Special Honda tools are necessary for some procedures.

USA
Order online: www.helminc.com

Order Toll Free: 1-888-CYCLE93
(1-888-292-5393)
(NOTE: For Credit Card Orders Only)
Monday - Friday 8:00 AM - 6:00 PM ET

Description
2026 XR150L Service Manual
Common Service Manual (61CSM00)
USA Winter Storage Guide (S9507)
2026 XR150L Owner’s Manual

Warranty Coverage and Service

Coverage

Your new Honda is covered by the following warranties:

- Vehicle Limited Warranty
- Emission Control System Warranty
- USA Noise Control Warranty

The responsibilities, restrictions, and exclusions that apply to these warranties are explained in the Warranties Booklet given to you by your Honda dealer at the time of purchase. Always keep your Honda owner's card with your Warranties Booklet.

Canada Please refer to the Warranty Booklet posted on our website at www.honda.ca.

It is important to realize that your warranty applies only to defects in material or workmanship of your Honda. Your warranty coverage does not apply to the normal wear and deterioration associated with use of the vehicle.

Your warranty coverage is not voided if you perform your own maintenance. However, failures that occur due directly to improper maintenance are not covered by these warranties.

USA You can extend almost all of your warranty coverage through the HondaCare® Protection Plan. For more information, see your Honda dealer.

Statement on Warranty Coverage for Aftermarket and Recycled Parts

The Magnuson-Moss Warranty Act, 15 U.S.C. s. 2301 et seq., makes it illegal for motor vehicle manufacturers to void a motor vehicle warranty or deny warranty coverage solely because an aftermarket or recycled part has been used to repair the vehicle or someone other than the authorized service provider performed service on the vehicle. This provision does not apply to a new motor vehicle purchased solely for commercial or industrial use.

Under federal law, a manufacturer may deny warranty coverage and charge for repairs to a vehicle if it is discovered that an aftermarket or recycled part installed on the vehicle is defective or was installed incorrectly and caused damage to another part of the vehicle otherwise covered under warranty. The Federal Trade Commission requires that a manufacturer demonstrate that an aftermarket or recycled part or service performed by a person other than an authorized service provider caused damage to another part of the vehicle otherwise covered under warranty before denying warranty coverage. Additionally, federal law allows a manufacturer to void a motor vehicle warranty or deny warranty coverage if the manufacturer provides the article or service to consumers free of charge under the warranty or the manufacturer has secured a waiver from the Federal Trade Commission.

Continued

Service

Please remember that maintenance recommended in the Maintenance Schedule is not included in your warranty coverage.

If you believe you have a problem with your vehicle, call the service department of your Honda dealer. Make an appointment for an inspection and diagnosis. You will be asked to authorize that inspection, and your dealer will return the results of the inspection. If a problem exists and is covered under warranty, your dealer will perform the warranty repairs. If you have any questions about your warranty coverage or the nature of the repair, talk to the Service Manager of your Honda dealer.

If a misunderstanding occurs and you aren't satisfied with your dealer's handling of the situation, we suggest you discuss your problem with the appropriate member of the dealership's management team. If you are still not satisfied, contact the owner of the dealership or their designated representative.

Honda Contacts

American Honda Motor Co., Inc.

If you wish to contact Honda directly to comment on your experiences with your vehicle or with your dealer, please send your comments using one of the following methods:

POST MAIL

Powersports Customer Relations
American Honda Motor Co., Inc.
4900 Marconi Drive
Alpharetta, GA 30005-8847

PHONE

Telephone: (866) 784-1870

ONLINE CUSTOMER SERVICE

Website: *https://powersports.honda.com/contact-us*

Canada

Honda Canada Inc.
Customer Relations Department,
180 Honda Boulevard
Markham, Ontario
L6C 0H9
Telephone: (888) 946-6329
Fax: (877) 939-0909
E-mail: honda_cr@ch.honda.com
Please include the following information in your letter:

- Name, address, and telephone number
- Product model, year, and VIN
- Date of purchase
- Dealer name and address

We will likely ask your Honda dealer to respond, or possibly acknowledge your comments directly.

Continued

Your Honda Dealer

The service department of your Honda dealer offers trained personnel to perform regular maintenance and unexpected repairs. It has the latest available service information from Honda and also handles warranty inspections and repairs.

The parts department offers Honda Genuine Parts, Pro Honda products, Honda Accessories (USA only), and Honda accessories and products (Canada only) that provide the same quality that went into your vehicle.

USA The sales department offers the HondaCare® Protection Plan to extend almost all of your warranty coverage.

Your Honda dealer can also supply information about riding events and information about safety training available in your local area.

Reporting Safety Defects

USA

If you believe that your vehicle has a defect which could cause a crash or could cause injury or death, you should immediately inform the National Highway Traffic Safety Administration (NHTSA) in addition to notifying American Honda Motor Co., Inc.

If NHTSA receives similar complaints, it may open an investigation, and if it finds that a safety defect exists in a group of vehicles, it may order a recall and remedy campaign. However, NHTSA cannot become involved in individual problems between you, your dealer, or American Honda Motor Co., Inc.

To contact NHTSA, you may call the Vehicle Safety Hotline toll-free at:
1-888-327-4236
(TTY: 1-800-424-9153); go to *https://www.safercar.gov*;
or write to:
Administrator, NHTSA,
1200 New Jersey Avenue, SE.,
Washington, DC 20590.
You can also obtain other information about motor vehicle safety from:
https://www.safercar.gov.

Continued

Canada

If you believe that your vehicle has a defect which could cause a crash or could cause injury or death, you should immediately inform Honda Canada Inc. and you may also inform Transport Canada.

If Transport Canada receives similar complaints, it may open an investigation, and if it finds that a safety defect exists in a group of vehicles, it may lead to a recall and remedy campaign. However, Transport Canada cannot become involved in individual problems between you, your dealer, or Honda Canada Inc.

To contact Transport Canada's Defect Investigations and Recalls Division,

Mailing Address:
Transport Canada
Motor Vehicle Safety Investigations Laboratory
80 Noel Street
Gatineau, QC
J8Z 0A1

Telephone: 819-420-4300 (Ottawa-Gatineau area or internationally)
Toll free: 1-800-333-0510 (in Canada)

Online:
(English Link:) *www.tc.canada.ca/recalls*
(French Link:) *www.tc.canada.ca/rappels*

For more information on reporting safety defects or about motor vehicle safety, go to *https://www.tc.gc.ca/roadsafety*.

Main Components

Overall length	81.7 in (2,075 mm)
Overall width	31.9 in (810 mm)
Overall height	44.5 in (1,130 mm)
Wheelbase	53.5 in (1,360 mm)
Minimum ground clearance	9.6 in (245 mm)
Caster angle	27°0'
Trail	4.1 in (104 mm)
Curb weight	282 lb (128 kg)
Maximum weight capacity *1	311 lb (141 kg)
Maximum weight on rear carrier	11.0 lb (5.0 kg)
Passenger capacity	Rider and 1 passenger
Minimum turning radius	7.2 ft (2.20 m)

*1 : Including rider, passenger, all luggage, and accessories

Displacement *1	9.1 cu-in (149 cm^3)	
Bore x stroke	2.26 x 2.28 in (57.3 x 57.8 mm)	
Compression ratio	9.5 : 1	
Fuel	Unleaded gasoline Recommended: 86 PON or higher	
Tank capacity	2.77 US gal (10.5 L)	
Battery	YTZ7S 12 V-6 Ah (10 HR)	
Gear ratio	1st	2.785
	2nd	1.875
	3rd	1.409
	4th	1.120
	5th	0.937
Reduction ratio (primary / final)	3.350 / 2.882	

*1 : Displacement less than 9.2 cu-in (150 cm^3) may have highway operating restrictions depending on state laws.

Service Data

Tire size	Front	90/90-19 M/C 52P
	Rear	110/90-17 M/C 60P
Tire type	Bias-ply, tube	
Recommended Tire	Front	CST C-6559F
	Rear	CST C-6559
Tire air pressure Up to 90 kg (200 lbs) load	Front	22 psi (150 kPa, 1.50 kgf/cm^2)
	Rear	22 psi (150 kPa, 1.50 kgf/cm^2)
Tire air pressure Up to Maximum weight capacity	Front	22 psi (150 kPa, 1.50 kgf/cm^2)
	Rear	29 psi (200 kPa, 2.00 kgf/cm^2)
Minimum tread depth	Front	0.12 in (3.0 mm)
	Rear	0.12 in (3.0 mm)
Spark plug	(standard)	CPR8EA-9 (NGK)
Spark plug gap	0.03 - 0.04 in (0.8 - 0.9 mm)	
Idle speed	1,400 ± 100 rpm	
Recommended engine oil	API Service Classification SJ or higher except oils labeled as energy conserving or resource conserving on the circular API service label, SAE 10W-30, JASO T 903 standard MA, Pro Honda GN4 4-stroke oil (USA & Canada) or Honda 4-stroke oil, or an equivalent motorcycle oil	

Engine oil capacity	After draining	1.1 US qt (1.0 L)
	After disassembly	1.3 US qt (1.2 L)
Recommended brake fluid	Honda DOT 3 or DOT 4 Brake Fluid	
Recommended drive chain lubricant	Pro Honda HP Chain Lube or equivalent	
Drive chain slack	13/16 - 1 3/16 in (20 - 30 mm)	
Standard drive chain	CHOHO 428 HO	
	No. of links	130
Standard sprocket size	Drive sprocket	17 T
	Driven sprocket	49 T

■ Bulbs

Headlight	12 V-60/55 W
Brake light/Taillight	12 V-21/5 W
Front turn signal	12 V-21 W × 2
Rear turn signal	12 V-21 W × 2
License plate light	12 V-5 W

■ Fuses

Main fuse	15 A
Other fuse	7.5 A

■ Torque Specifications

Tail cap mounting bolt	7 lbf·ft (10 N·m, 1.0 kgf·m)
Spark arrester mounting bolt	7 lbf·ft (10 N·m, 1.0 kgf·m)
Headlight mounting bolt	6.3 lbf·ft (8.5 N·m, 0.9 kgf·m)

Information Record

VIN	
Engine No.	
Color Label & Code	
Owner's Name	
Address	
City/State	
Phone	
Dealer's Name	
Address	
City/State	
Phone	
Service Manager	

Index

A

Accessories 13

B

Battery 43, 55
Brake Light Switch 69
Brakes
- Fluid 48, 62
- Pad Wear 63
- Shoe Wear 68

Braking 10
Bulb
- Brake Light/Taillight 84
- Front Turn Signal 86
- Headlight 82
- License Plate Light 86
- Rear Turn Signal 86

C

Caring for Your Vehicle 92
Choke Lever 24
Clutch System 74
Color Label 42

D

Drive Chain 48, 71
Drive Chain Slider 72

E

Electrical Trouble 81
Engine
- Number 98
- Oil 47, 60
- Starting 24
- Stop Switch 20, 91
- Stopping 91

Environment 97

F

Flooded Engine 26
Fuel
- Recommended 28
- Reserve Capacity 28
- Tank Capacity 28

Fuel Valve 23
Fuses 46, 87

G
Gasohol 104
Gasoline 12, 28

H
Headlight Dimmer Switch 20
High Beam Indicator 19
Honda Contacts 109
Horn Button 20

I
Ignition Key 90
Ignition Switch 21, 24, 91
Indicators 19
Information Record 116
Instruments 18

L
Labels 7
Load Limits 15
Loading Guidelines 15

M
Maintenance
Fundamentals 39
Importance 33
Safety 34
Schedule 35
Maximum Weight Capacity 15, 113
Modifications 13

N
Neutral Indicator 19

O
Odometer 18, 91
Off-Road Safety 14
Oil
Engine 47, 60
Oxygenated Fuels 104

P
Parking 11
Parts Location 16
Protective Apparel 9

R
Recommended
Fuel 28, 113
Oil 47
Refueling 28
Removal
Battery 55
Seat 56
Side Cover 57
Reporting Safety Defects 111
Riding Precautions 10

S
Safety Guidelines 3
Safety Labels 7
Safety Precautions 9
Seat 56
Shifting Gears 27
Side Cover 57
Side Stand 70
Specifications 113
Start Button 20
Starting the Engine 24
Steering Lock 22
Stopping Engine 91
Storage
Document Bag 30, 91
Equipment 30
Owner's Manual 30, 91
Tool Kit 30
Storing Your Vehicle 95
Switches 20

T
Throttle 77
Tires
Air Pressure 50
Puncture 80
Replacing 50, 80
Tool Kit 30
Transporting 96
Tripmeter 18, 91
Troubleshooting 78
Turn Signal Indicator 19
Turn Signal Switch 20

V
Vehicle Identification Number 98

W

Warranty Coverage and Service 106
Washing Your Vehicle 92
Weight Limit..... 15, 113

California Proposition 65 Warning

⚠**WARNING:** Operating, servicing and maintaining a passenger vehicle or off-highway motor vehicle can expose you to chemicals including engine exhaust, carbon monoxide, phthalates, and lead, which are known to the State of California to cause cancer and birth defects or other reproductive harm. To minimize exposure, avoid breathing exhaust, do not idle the engine except as necessary, service your vehicle in a well-ventilated area and wear gloves or wash your hands frequently when servicing your vehicle. For more information go to www.P65Warnings.ca.gov/passenger-vehicle.

Quebec Regulatory Notice

Availability of spare parts, repair service and information for maintenance or repair:

Pursuant to applicable Quebec regulation, Honda does not guarantee the availability of replacement parts, repair services, or information required for the maintenance or repair of this product or its components.

For more information visit: www.honda.ca/en/quebecregulatorynotice

31KRHQ30
00X31-KRH-Q300

© 2025 Honda Motor Co., Ltd.
All Rights Reserved

Printed in Mexico