# Contents

**MOTORCYCLE SAFETY ..... 1**
Important Safety Information ..... 2
Important Safety Precautions ..... 2
Loading ..... 3
Accessories & Modifications ..... 4
Safety Labels ..... 5

**INSTRUMENTS & CONTROLS ..... 7**
Operation Component Locations ..... 8
Indicators & Displays ..... 9
Multi-function Display ..... 10
Speedometer ..... 12
Odometer/Tripmeter A & B ..... 12
Fuel Mileage Meter ..... 12
Digital Clock Setting ..... 13
Backlight Brightness Adjustment ..... 13
Changing the Speed and Mileage Unit ..... 14
Changing the Fuel Mileage Unit ..... 14

**BEFORE RIDING ..... 15**
Are You Ready to Ride? ..... 16
Is Your Motorcycle Ready to Ride? ..... 17
Pre-ride Inspection ..... 17

**BASIC OPERATING INSTRUCTIONS .... 19**
Safe Riding Precautions ..... 20
Side Stand ..... 20
Starting & Stopping the Engine ..... 21
Fast Idle Knob ..... 21
Preparation ..... 21
Starting Procedure ..... 21
How to Stop the Engine ..... 22
Shifting Gears ..... 23
Braking ..... 24
Parking ..... 25
Post-ride Inspection ..... 26
Break-in Guidelines ..... 27

**SERVICING YOUR HONDA ..... 29**
*Before You Service Your Honda*
The Importance of Maintenance ..... 30
Maintenance Safety ..... 31
Important Safety Precautions ..... 31
Maintenance Schedule ..... 32
Maintenance Record ..... 35
General Competition Maintenance ..... 36
Before & After Competition Maintenance ..... 40
Between Motos & Practice Maintenance ..... 40
After Competition Maintenance ..... 41

*Service Preparations*
Maintenance Component Locations ..... 42
Seat ..... 43
Side Cover ..... 44
Fuel Tank ..... 45
Subframe ..... 49

*Service Procedures*
Fluids & Filters
Fuel System ..... 54
Engine Oil ..... 63
Coolant ..... 66
Air Cleaner ..... 69
Crankcase Breather ..... 71

Engine
Throttle ..... 72
Engine Idle Speed ..... 74
Clutch System ..... 75
Spark Plug ..... 80
Valve Clearance ..... 81
Piston/Piston Rings/Piston Pin ..... 90

Chassis
Suspension ..... 99
Brakes ..... 116
Wheels ..... 120
Tires & Tubes ..... 121
Side Stand ..... 123
Drive Chain ..... 124
Exhaust Pipe/Muffler ..... 127
Spark Arrester ..... 129
Additional Maintenance Procedures ..... 131

Electrical
Battery ..... 133
Headlight & Taillight ..... 135

Appearance Care ..... 136

**ADJUSTMENTS FOR COMPETITION ..... 139**
Front Suspension Adjustments ..... 140
Front Suspension Air Pressure ..... 140
Front Suspension Damping ..... 141
Fork Springs ..... 141
Fork Oil Adjustment..... 142
Rear Suspension Adjustments ..... 143
Rear Suspension Spring Pre-Load..... 143
Rear Suspension Damping ..... 144
Rear Suspension Race Sag ..... 146
Suspension Adjustments for Track Conditions ..... 148
Suspension Adjustment Guidelines ..... 149
Tuning Tips ..... 152
Spark Plug Reading..... 152
Chassis Adjustments ..... 153
Rear End..... 153
Fork Height/Angle..... 153
Wheelbase ..... 153
Tire Selection for Track Conditions ..... 154
Personal Fit Adjustments ..... 155
Control Positioning ..... 155
Handlebar Position, Width & Shape ..... 155

**TIPS.....157**
Transporting Your Motorcycle .....158
Storing Your Honda .....159
Preparation for Storage .....159
Removal from Storage .....159
You & the Environment .....160
Troubleshooting .....161

**TAKING CARE OF THE UNEXPECTED.....163**
If a Fuse Blows .....164
If Your Battery Is Low (or Dead) .....165
If You Crash .....166

**TECHNICAL INFORMATION.....167**
Vehicle Identification .....168
Serial Numbers .....168
Specifications .....169
Torque Specifications .....170
Nuts, Bolts, Fasteners .....170
Emission Control Systems .....173
Oxygenated Fuels .....175
Competition Logbook .....176
Optional Parts List .....178
Spare Parts & Equipment .....179
Spare Parts .....179
General Tools.....179
Honda Special Tools.....179
Chemical Products .....179
Other Products .....179
Wiring Diagram .....180

**CONSUMER INFORMATION .....181**
Authorized Manuals .....182
Warranty Coverage .....183
Warranty Service .....184
Contacting Honda .....185
Your Honda Dealer .....186

**INDEX ..... 188**

***QUICK REFERENCE***

## IMPORTANT NOTICES

**FOR RECREATIONAL OFF-ROAD OR COMPETITION USE ONLY**
This Motorcycle is designed and manufactured for recreational off-road use or competition only and is covered by noise control warranty. It does not conform to federal motor vehicle safety standards or US EPA On Highway Exhaust Emission regulations, and operation on public streets, roads, or highways is illegal. The vehicle is equipped with a USDA qualified spark arrester. If you need to cross a paved or public road, get off and walk your motorcycle across.

Do not modify any emission-related items except for competition use. Any emission-related modifications should be restored to standard factory specifications before resuming recreational off-road use.

**NO PASSENGERS**
This motorcycle is designed and constructed as an operator-only model. The motorcycle load limit and seating configuration do not safely permit the carrying of a passenger.

This manual should be considered a permanent part of the motorcycle and should remain with the motorcycle when it is resold.

All information in this publication is based on the latest product information available at the time of approval for printing. Honda Motor Co., Ltd. reserves the right to make changes at any time without notice and without incurring any obligation.

No part of this publication may be reproduced without written permission.

This vehicle pictured in this owner’s manual may not match your actual vehicle.

© Honda Motor Co., Ltd., 2019

**2020**
**Honda CRF450X**
**OWNER'S MANUAL & COMPETITION HANDBOOK**

**FOR OFF-ROAD USE ONLY**
This vehicle is designed and manufactured for off-road use only.

It conforms to US EPA Noise Emission regulations, but does not conform to Federal Motor Vehicle Safety Standards or US EPA On Highway Exhaust Emission regulations, and operation on public streets, roads, or highways is illegal. The vehicle is equipped with a USDA qualified spark arrester. Obey local laws and regulations.

It conforms to US EPA and California emission regulations for off-road motorcycles.

# Introduction

Congratulations on choosing your Honda CRF off-road motorcycle.

When you own a Honda, you're part of a worldwide family of satisfied customers – people who appreciate Honda's reputation for building quality into every product.

Your Honda was designed as a recreational motorcycle for off-road use by one rider only.

Before riding, take time to get acquainted with your CRF and how it works. To protect your investment, we urge you to take responsibility for keeping your CRF well maintained. Scheduled service is a must, of course. But it's just as important to observe the break-in guidelines, and perform all the pre-ride and other periodic checks detailed in this manual.

You should also read the owner's manual before you ride. It's full of facts, instructions, safety information, and helpful tips. To make it easy to use, the manual contains a table of contents, a detailed list of topics at the beginning of each section, and an index at the back of the book.

As you read this manual, you will find information that is preceded by a NOTICE symbol. This information is intended to help you avoid damage to your CRF, other property, or the environment.

Unless you are mechanically qualified and have the proper tools, you should see your dealer for the service and adjustment procedures discussed in this manual.

An official Honda Service Manual for your CRF is available (page 182). It is the same manual your dealer uses. If you plan to do any service on your CRF beyond the standard maintenance procedures in this manual, you will find an official Honda Service Manual a valuable reference.

Read the Warranties Booklet (page 183) thoroughly so you understand the coverages that protect your new Honda and are aware of your rights and responsibilities.

This motorcycle has no cooling fan. For this reason, engine overheating and coolant loss will occur if the engine is kept idling too long when hot.

Additionally, when riding in mud or sand, or any condition that causes high engine load at low vehicle speed, the time it takes for the engine to overheat will be shortened, especially when the ambient temperature is high. Continuing to operate the unit in these conditions will result in engine damage.

Whenever you ride, tread lightly. By staying on established trails and riding only in approved areas, you help protect the environment and keep off-road riding areas open for the future.

If you have any questions, or if you ever need a special service or repairs, remember that your Honda dealer knows your CRF best and is dedicated to your complete satisfaction.

Please report any change of address or ownership to your dealer so we will be able to contact you concerning important product information.

You may also want to visit our website at www.powersports.honda.com.

Happy riding!

**ABBREVIATION**

Throughout this manual, the following abbreviations are used to identify the respective parts or system.

| Abbrev. term | Full term |
|---|---|
| CKP sensor | Crankshaft Position sensor |
| DLC | Data Link Connector |
| ECM | Engine Control Module |
| ECT sensor | Engine Coolant Temperature sensor |
| IAT sensor | Intake Air Temperature sensor |
| MAP sensor | Manifold Absolute Pressure sensor |
| MIL | Malfunction Indicator Lamp |
| PGM-FI | Programmed Fuel Injection |
| TDC | Top Dead Center |
| TP sensor | Throttle Position sensor |

# A Few Words About Safety

Your safety, and the safety of others, is very important. Operating this motorcycle safely is an important responsibility.

To help you make informed decisions about safety, we have provided operating procedures and other information on labels and in this manual.
This information alerts you to potential hazards that could hurt you or others.

Of course, it is not practical or possible to warn you about all hazards associated with operating or maintaining a motorcycle. You must use your own good judgment.

You will find important safety information in a variety of forms, including:

- **Safety Labels** — on the motorcycle.
- **Safety Messages** — preceded by a safety alert symbol ⚠ and one of three signal words: **DANGER**, **WARNING**, or **CAUTION**.

These signal words mean:

**⚠ DANGER** **You WILL be KILLED or SERIOUSLY HURT if you don't follow instructions.**

**⚠ WARNING** **You CAN be KILLED or SERIOUSLY HURT if you don't follow instructions.**

**⚠ CAUTION** **You CAN be HURT if you don't follow instructions.**

- **Safety Headings** — such as Important Safety Reminders or Important Safety Precautions.
- **Safety Section** — such as Motorcycle Safety.
- **Instructions** — how to use this motorcycle correctly and safety.

This entire manual is filled with important safety information — please read it carefully.

# Motorcycle Safety

This section presents some of the most important information and recommendations to help you ride your CRF safely. Please take a few moments to read these pages. This section also includes information about the location of safety labels on your CRF.


Important Safety Information ..... 2
Important Safety Precautions ..... 2
Loading ..... 3
Accessories & Modifications ..... 4
Safety Labels ..... 5

# Important Safety Information

## Important Safety Precautions

Your CRF can provide many years of pleasure, if you take responsibility for your own safety and understand the challenges you can meet in competitive racing.

There is much that you can do to protect yourself when you ride. You'll find many helpful recommendations throughout this manual. The following are a few that we consider to be most important.

***Always Wear a Helmet.*** It's a proven fact: helmets significantly reduce the number and severity of head injuries. So always wear an approved motorcycle helmet. We also recommended that you wear eye protection, sturdy boots, gloves, and other protective gear.

***Never Carry a Passenger.*** Your CRF is designed for one person only. There are no handholds, footrests, or seat for a second person–so never carry a passenger. A passenger could interfere with your ability to move around to maintain your balance and control of the motorcycle.

***Ride Off-road Only.*** Your CRF is designed and manufactured for off-road use only. The tires are not made for pavement, and the CRF does not have turn signals and other features required for use on public roads. If you need to cross a paved or public road, get off and walk your CRF across.

***Always Wear Protective Gear.*** We recommend that you wear sturdy boots, gloves, and other protective gear. The exhaust system becomes very hot during operation, and it remains hot after operation. Never touch any part of the hot exhaust system. Wear clothing that fully covers your legs. Do not wear loose clothing which could catch on the control levers, kickstarter, footpegs, drive chain, or wheels.

***Take Time to Learn and Practice.*** Developing off-road riding skills is a gradual, step-by-step process. Start by practicing at low speed in a safe area and slowly build your skills.
Personal instruction from an experienced rider can also be valuable.

If you need assistance, ask your dealer about riding groups in your area.

Also be sure to read the *Tips & Practice Guide for the Off-Highway Motorcyclist* booklet that came with your CRF.

***Be Alert for Off-road Hazards.*** The terrain can present a variety of challenges when you ride off-road. Continually ''read" the terrain for unexpected turns, drop-offs, rocks, ruts, and other hazards. Always keep your speed low enough to allow time to see and react to hazards.

***Ride within Your Limits.*** Pushing limits is another major cause of motorcycle crashes.
Never ride beyond your personal abilities or faster than conditions warrant. Remember that alcohol, drugs, fatigue, and inattention can significantly reduce your ability to make good judgments and ride safely.

***Don't Drink and Ride.*** Alcohol and riding don't mix. Even one drink can reduce your ability to respond to changing conditions, and your reaction time gets worse with every additional drink. So don't drink and ride, and don't let your friends drink and ride either.

***Keep Your Honda In Safe Condition.*** It's important to keep your CRF properly maintained and in safe riding condition. Having a breakdown can be difficult, especially if you are stranded off-road far from your base. To help avoid problems, inspect your CRF before every ride and perform all recommended maintenance.

***Lithium-Ion (Li-Ion) Battery.***
If you smell an unusual odor coming from the lithium-ion (li-ion) battery, park your CRF in a safe place outside and away from flammable objects, then stop the engine. Have your CRF inspected by your dealer immediately.

Your CRF was designed as a rider-only motorcycle. It was not designed to carry a passenger or cargo. A passenger or cargo could interfere with your ability to move around to maintain your balance and control of the CRF.

In addition, exceeding the weight limits or carrying an unbalanced load can seriously affect your CRF's handling, braking, and stability. Adding accessories or making modifications that change this CRF's design and performance can also make it unsafe. Also, the weight of any accessories will reduce the maximum load the motorcycle can carry.

More specific information on load limits, accessories, and modifications follows.

## Loading

How much weight you put on your CRF, and how you load it, are important to your safety. If you decide to carry cargo, you should be aware of the following information.

**⚠ WARNING**

Overloading or carrying a passenger can cause a crash and you can be seriously hurt or killed.

Follow all loading guidelines in this manual.

**Loading Guidelines**

As discussed on page 2, we recommended that you do not carry any cargo on this motorcycle. However, if you decide to carry cargo, ride at reduced speeds and follow these commonsense guidelines:

- Keep cargo small and light. Make sure it cannot easily be caught on brush or other objects, and that it does not interfere with your ability to shift position to maintain balance and stability.
- Place weight as close to the center of the motorcycle as possible.
- Do not attach large or heavy items (such as a sleeping bag or tent) to the handlebar, fork, or front fender.
- Check that both tires are inflated properly.

## Accessories & Modifications

Modifying your CRF or using non-Honda accessories can make your CRF unsafe.

Before you consider making any modifications or adding an accessory, be sure to read the following information.

**⚠ WARNING**

Improper accessories or modifications can cause a crash in which you can be seriously hurt or killed.

Follow all instructions in this owner's manual regarding modifications and accessories.

**Accessories**

We strongly recommend that you use only Honda Genuine accessories that have been specifically designed or approved and tested for your CRF. Because Honda cannot test all other accessories, you must be personally responsible for proper selection, installation, and use of non-Honda accessories. Check with your dealer for assistance and always follow this guideline:

- Make sure the accessory does not reduce ground clearance and lean angle, limit suspension travel or steering travel, alter your riding position, or interfere with operating any controls.

**Modifications**

We strongly advise you not to remove any original equipment or modify your CRF in any way that would change its design or operation.
Such changes could seriously impair your CRF's handling, stability, and braking, making it unsafe to ride.

We also advice you not to make any modifications or remove any equipment (such as the USDA qualified spark arrester or emission control system components) that would make the motorcycle illegal in your area.

This page shows the locations of safety labels on your CRF. Some labels warn you of potential hazards that could cause serious injury. Others provide important safety information. Read these labels carefully and don't remove them.

If the label comes off or becomes hard to read, contact your dealer for replacement.

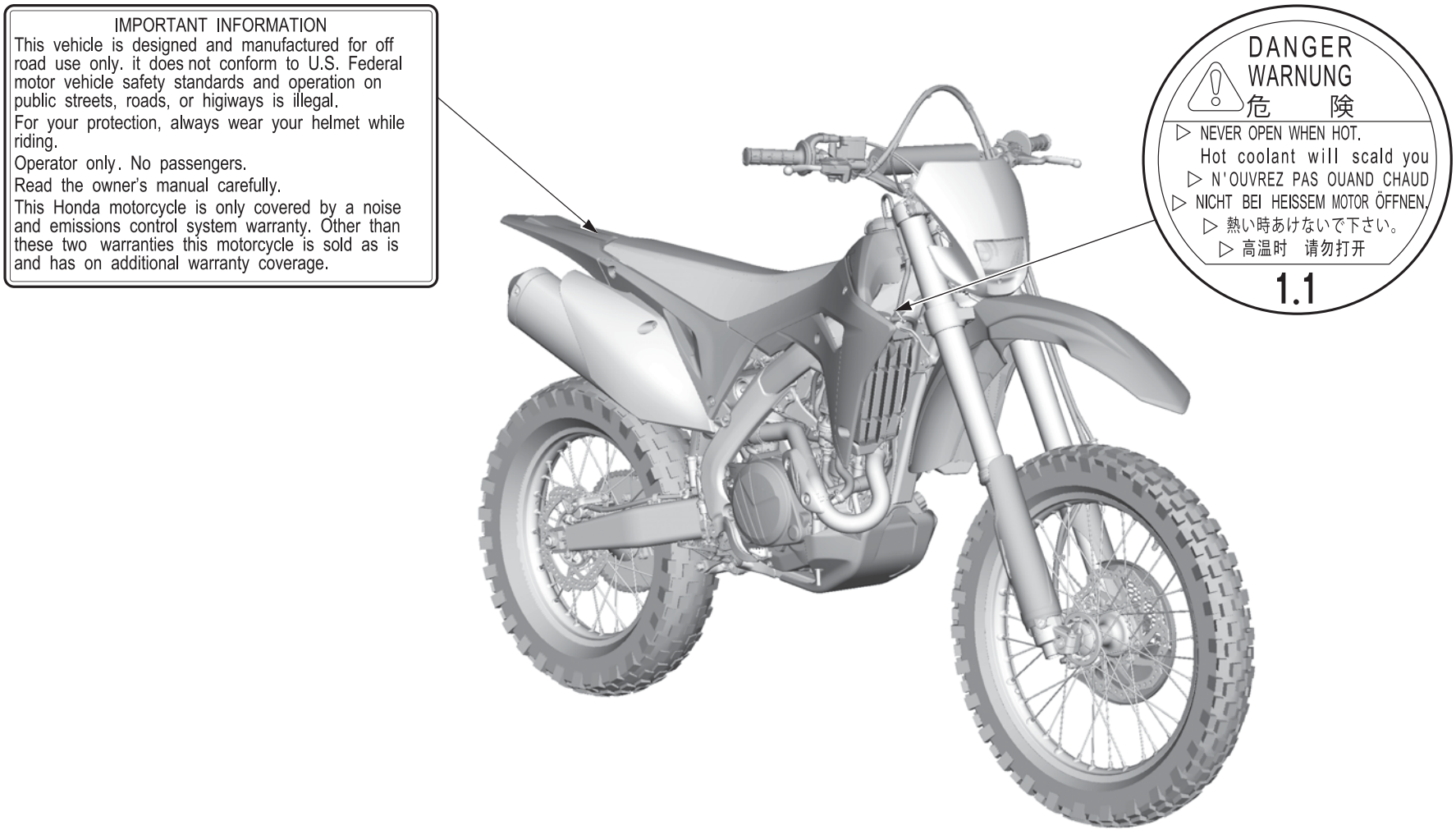

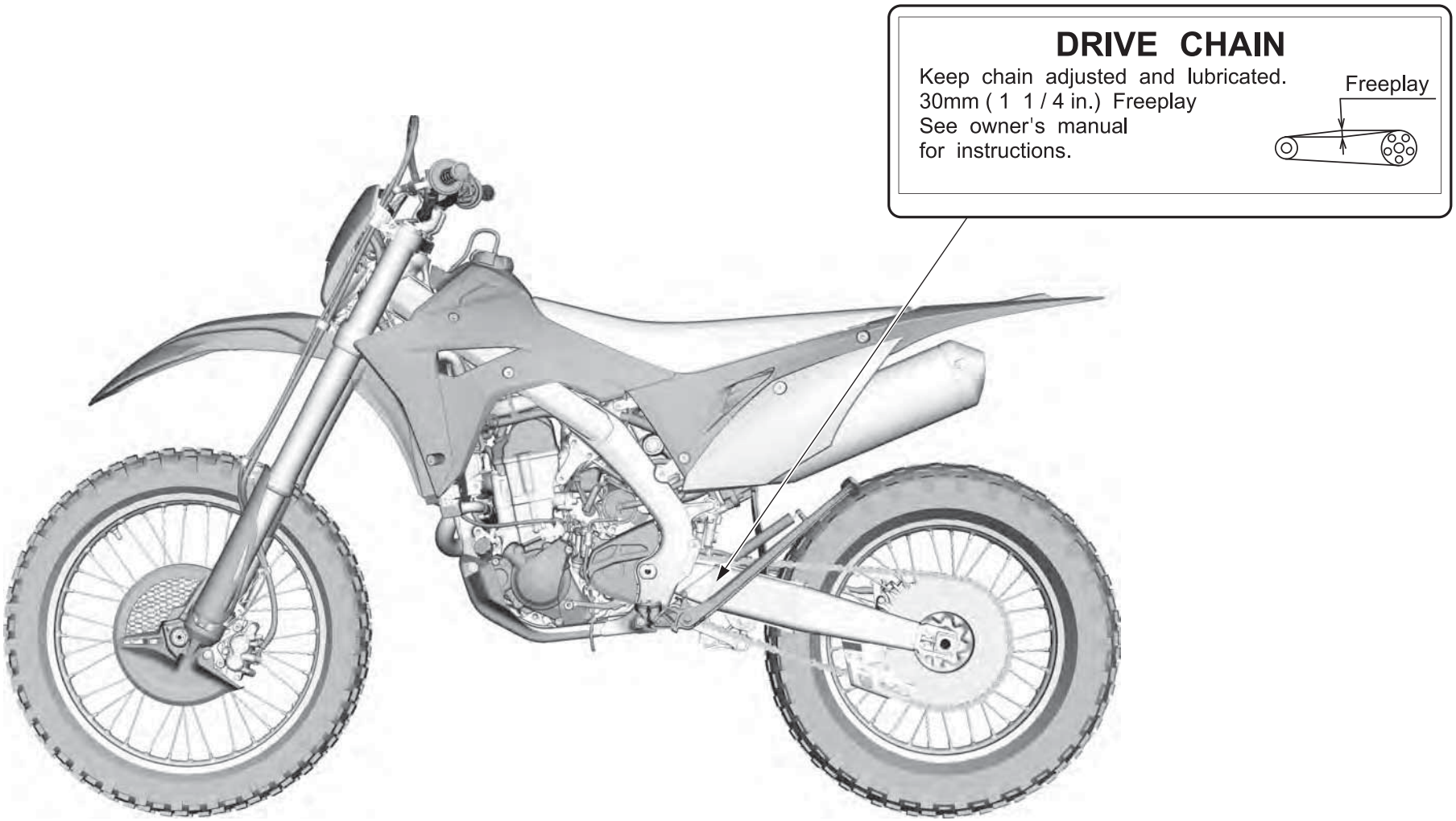
DRIVE CHAIN
Keep chain adjusted and lubricated.
30mm ( 1 1 / 4 in.) Freeplay
See owner's manual
for instructions.
Freeplay

# Instruments & Controls

Read this section carefully before you ride. It presents the location of the basic controls on your CRF.


Operation Component Locations ..... 8
Indicators & Displays ..... 9
Multi-function Display ..... 10
Speedometer..... 12
Odometer/Tripmeter A & B..... 12
Fuel Mileage Meter..... 12
Digital Clock Setting ..... 13
Backlight Brightness Adjustment ..... 13
Changing the Speed and Mileage Unit ..... 14
Changing the Fuel Mileage Unit..... 14

# Operation Component Locations

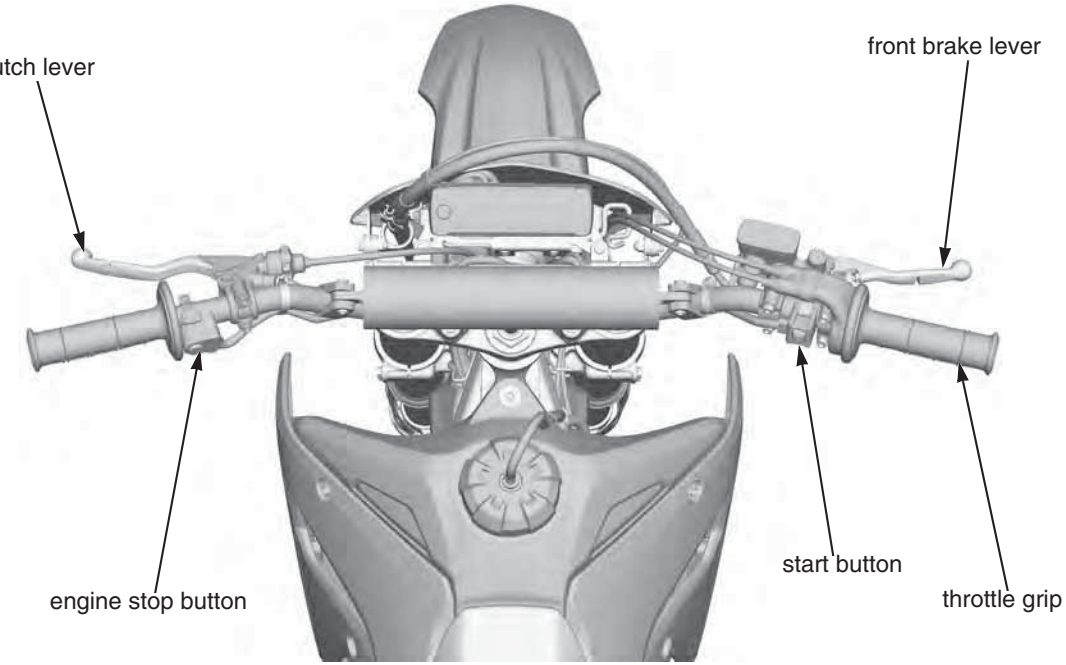


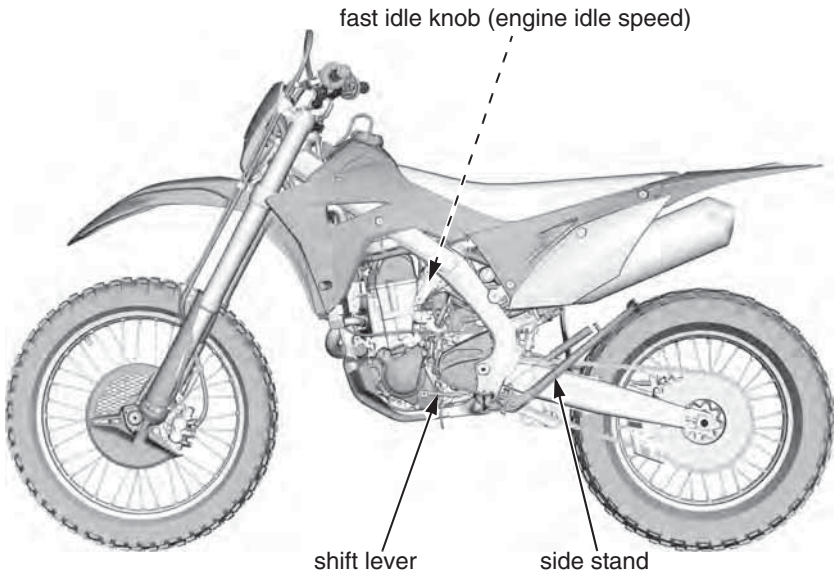


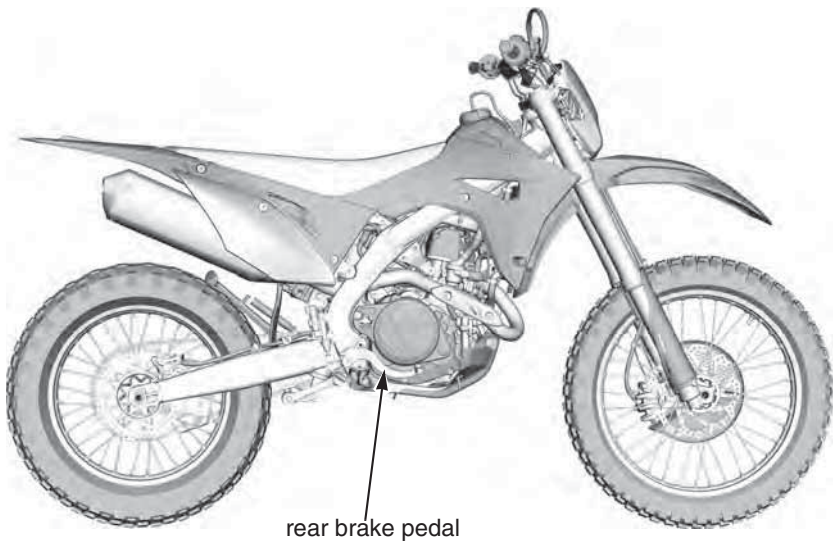

The indicators and display on your motorcycle keep you informed, alert you to possible problems, and make your riding safer and more enjoyable. Refer to the indicators and display frequently. Their functions are described on the following pages.

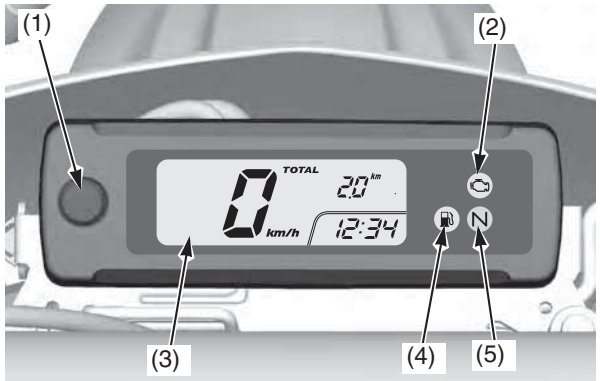


(1) SEL button
(2) PGM-FI (Programmed Fuel Injection) malfunction indicator lamp (MIL)
(3) multi-function display
(4) fuel reserve indicator
(5) neutral indicator

Lamp Check

The PGM-FI (Programmed Fuel Injection) malfunction indicator lamp (MIL) comes on when starting the engine so you can check that it is working. The indicator turns off after a few seconds.

When applicable, the neutral indicator comes on when starting the engine and remain on until you select the shift out of neutral.

These indicators are identified in the table on page 10 with the words: *Lamp Check.*

If one of these indicators does not come on when it should, have your dealer check for problems.

Display Check

When starting the engine, the multi-function display (1) will temporarily show all the modes and digital segments so that you can make sure the liquid crystal display is functioning properly.

The displays are identified in the table on page 10 with the words: *Display Check.*

If any part of these displays does not come on when it should, have your dealer check for problems.

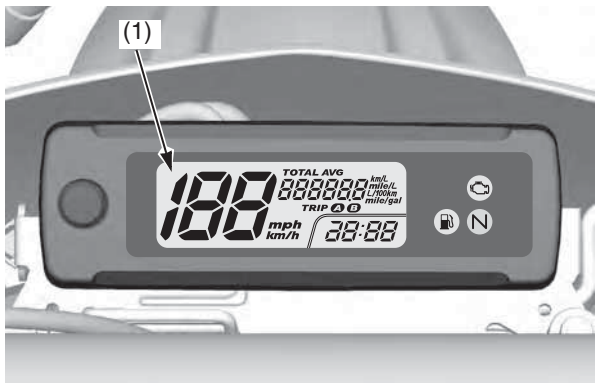


(1) multi-function display

| | | |
|---|---|---|
| 1 | SEL button | Uses this button for the following purposes.<br>• To change the 12/24 hour<br>• To adjust time<br>• To adjust display illumination<br>• To select and reset the fuel mileage meter<br>• To change the mileage units for the odometer/tripmeter and available driving distance<br>• To select and reset the tripmeter |
| 2 | PGM-FI (Programmed Fuel Injection) malfunction indicator lamp (MIL) | Lights when there is any abnormality in the PGM-FI (Programmed Fuel Injection) system. When starting the engine, the MIL (amber) will stay on for 2 seconds and then go off. This is normal. If the indicator comes on at any other time, reduce speed and take your motorcycle to your dealer as soon as possible. *Lamp Check.* |
| 3 | Multi-function display | The display includes the following functions. *Display check.* |
| | Speedometer | Shows riding speed in miles or kilometers per hour (page 12). |
| | Digital clock | Shows hour and minute (page 13). |
| | Odometer | Shows accumulated mileage (page 12). |
| | Tripmeter A & B | Shows the number of miles or kilometers ridden since you last reset the meter (page 12). |
| | Fuel mileage meter | Shows current fuel mileage, average fuel mileage, or fuel consumption (page 12). |
| 4 | Fuel reserve indicator | When this indicator comes on while riding, fuel reserved in the tank is about: 0.58 US gal (2.2 ℓ)<br>*Lamp Check.* |
| 5 | Neutral indicator | Lights when the transmission is in neutral. |

## Multi-function Display

The multi-function display includes the following functions:

speedometer
odometer
tripmeter A & B
fuel mileage meter
digital clock

The digital clock will reset if the battery is disconnected.

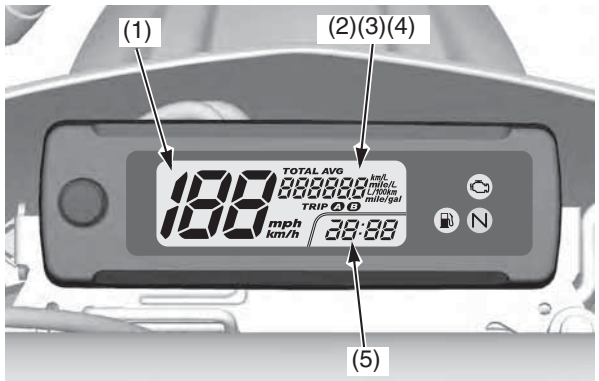


(1) speedometer
(2) odometer
(3) tripmeter
(4) fuel mileage meter
(5) digital clock

Normal MODE

Press the SEL button to select the Odometer, TRIP A, TRIP B, Current fuel mileage, Average fuel mileage (TRIP A/TRIP B) or Fuel consumption (TRIP A/TRIP B).

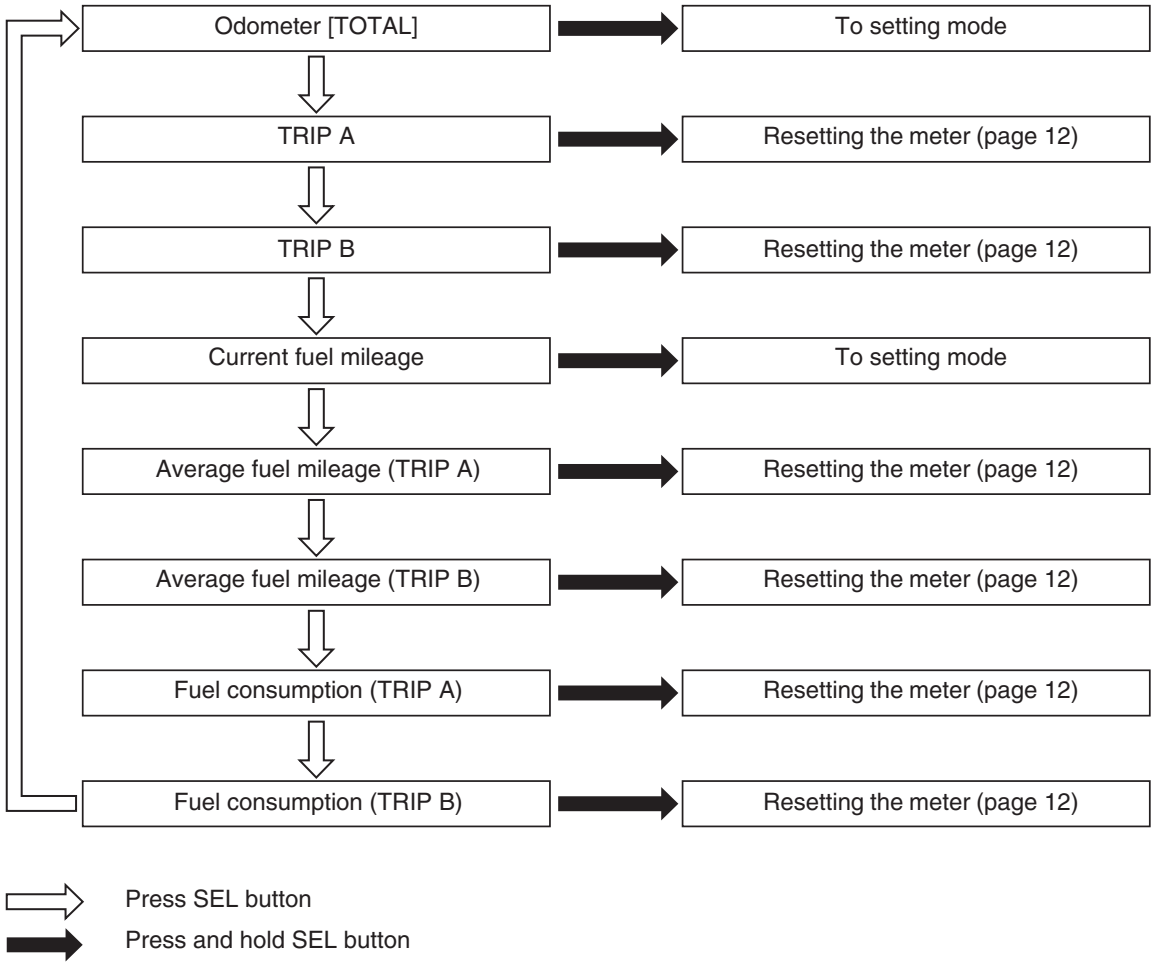


Setting MODE

Press and hold the SEL button while odometer or current fuel mileage is displayed, the display turn into the setting mode.

Following items can be changed sequentially.

- Time format setting
- Clock setting
- Backlight brightness adjustment
- Changing of speed and mileage unit
- Changing of fuel mileage unit

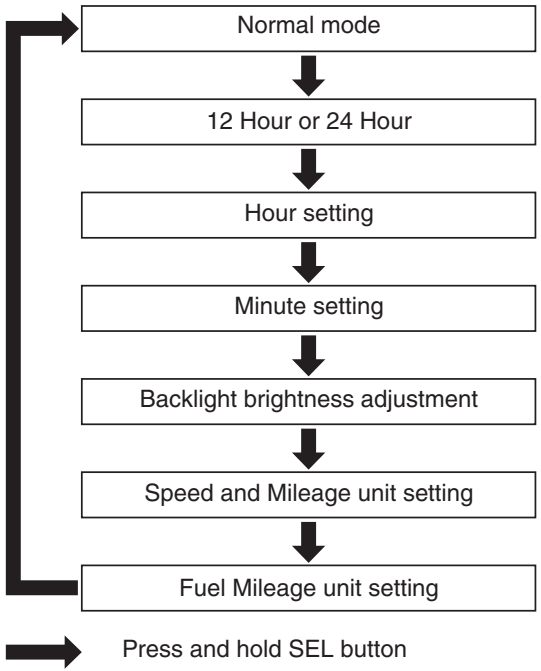


In addition, to move the ordinary display at display setting.

- The buttons is not pressed for about 30 seconds.
- Stop the engine and then restart the engine.

## Speedometer

The speedometer shows riding speed in miles or kilometers per hour.

## Odometer/Tripmeter A & B

The odometer shows the total miles or kilometers ridden.

The odometer can be displayed from 0 to 999,999 miles (kilometers).

The tripmeter A and tripmeter B show number of miles or kilometers ridden since you last reset the tripmeter.

To select the odometer, tripmeter A or tripmeter B, push the SEL button (1).

The tripmeter return to 0 when the read-out exceeds 9,999.9 miles (kilometers).

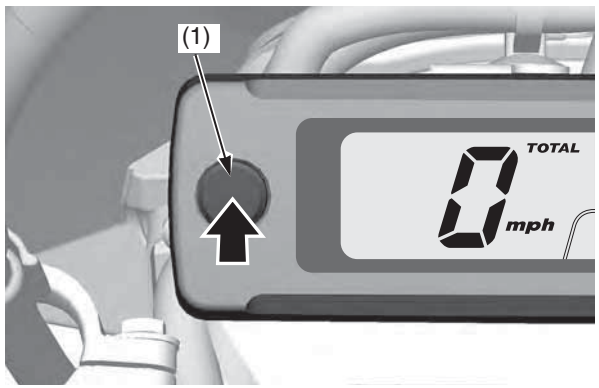


(1) SEL button

To Reset the Tripmeter, Average Fuel Mileage and Fuel Consumption

Press the SEL button (1) to select the TRIP A (2), average fuel mileage A (3), fuel consumption A (4), TRIP B, average fuel mileage B or fuel consumption B.

To reset tripmeter, average fuel mileage, and fuel consumption, press and hold SEL button with tripmeter, average fuel mileage, or fuel consumption displayed.

When they are reset, reset display appears at each indication. Then, the display returns to the last selected indication.

For example TRIP A, Average Fuel Mileage A and Fuel Consumption A:

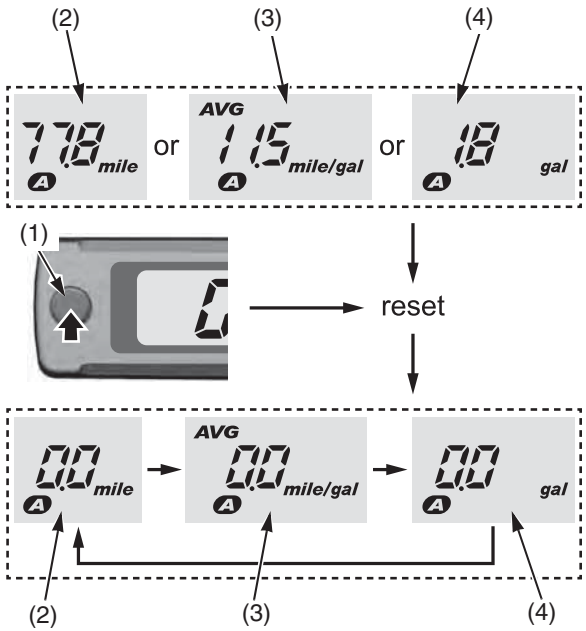


(1) SEL button
(2) TRIP A
(3) fuel mileage A
(4) fuel consumption A

## Fuel Mileage Meter

The fuel mileage meter includes the following functions:

current fuel mileage
average fuel mileage
fuel consumption

The unit of the indication depends on the unit which you select (page 14).
If the speed and mileage unit is set to ‘‘km/h’’/‘‘km’’, the indication mode of the current and average fuel mileage can be selected km/L or L/100 km (page 14).
If the speed and mileage unit is set to ‘‘mph’’/‘‘mile’’, the fuel mileage unit shows “mile/gal”.

Press the SEL button to change the indication to the current fuel mileage, average fuel mileage A, average fuel mileage B, fuel consumption A or fuel consumption B.

Current Fuel Mileage

Current fuel mileage shows the current, or instant fuel mileage you are getting. When your motorcycle speed is 4 mph (6 km/h) or below, “---.- (--.-)” is displayed. When “---.- (--.-)” is displayed except for the above mentioned cases, go to your dealer for service.

Average Fuel Mileage

The average fuel mileage is based on the each tripmeter A and tripmeter B. The average fuel mileage since tripmeter was reset. When “---.- (--.-) ” is displayed, see your dealer for service. Average fuel mileage is also reset when the tripmeter is reset (see previous step).

Fuel Consumption

The fuel consumption is based on the each tripmeter A and tripmeter B. The fuel consumption since tripmeter was reset. When “---.-” is displayed, see your dealer for service.

## Digital Clock Setting

The digital clock shows the hour and minute. To adjust the time format and clock, proceed as follows:

1. Starting the engine.
2. Press SEL button to select the odometer or current fuel mileage.

Odometer: Current fuel mileage:

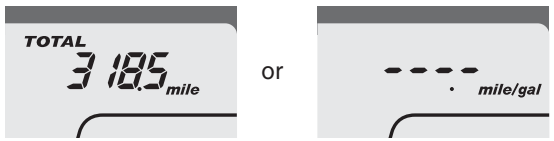


3. Press and hold SEL button until the current time format start flashing.

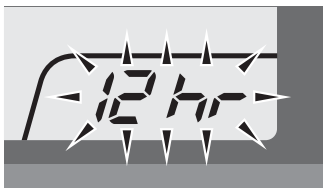


4. Press SEL button to select “12 hr” or “24 hr”.

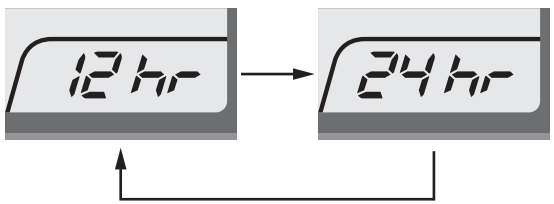


5. Press and hold SEL button. The time format is set, and then the display moves to the clock setting.
6. Press SEL button until the desired hour is displayed.

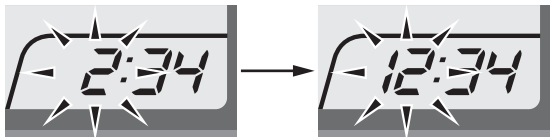


7. Press and hold SEL button. The minute digits start flashing.

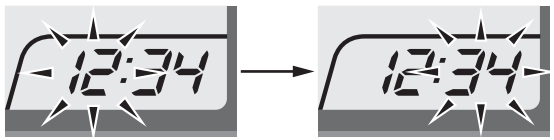


8. Press SEL button until the desired minute is displayed.

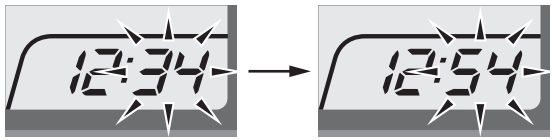


9. Press and hold SEL button. The clock is set, and then the display moves to the backlight brightness adjustment.

The established setting can also be set by stopping the engine.
The control is automatically switched from the setting mode to the normal mode if the button is not pressed for about 30 seconds. Even in this case, established setting is maintained.

## Backlight Brightness Adjustment

To adjust the backlight brightness, proceed as follows:

1. Refer to Digital Clock on previous step.
2. Press SEL button. The brightness is switched.

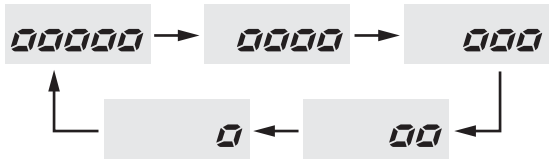


3. Press and hold SEL button. The backlight is set, and then the display moves the changing of the speed and mileage unit.

The established setting can also be set by stopping the engine.
The control is automatically switched from the setting mode to the normal mode if the button is not pressed for about 30 seconds. Even in this case, established setting is maintained.

## Changing the Speed and Mileage Unit

To adjust the Speed and Mileage Unit proceed as follows:

1. Refer to Backlight Brightness Adjustment on previous step.
2. Press SEL button to select either “mph” and “mile” or “km/h” and “km”.

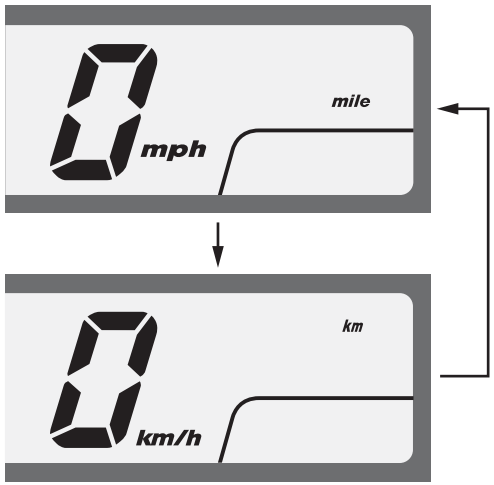


3. When selecting the “mph” and “mile”
   Press and hold SEL button. The speed and mileage unit is set, and then the display will return to the normal mode.
   When selecting the “km/h” and “km”
   Press and hold SEL button. The speed and mileage unit is set, and then the display moves the changing of the fuel mileage unit.

The established setting can also be set by stopping the engine.
The control is automatically switched from the setting mode to the normal mode if the button is not pressed for about 30 seconds. Even in this case, established setting is maintained.

## Changing the Fuel Mileage Unit

If the “mph” for speed and “mile” for mileage are selected, the fuel mileage unit cannot be select.
To adjust the Fuel Mileage Unit proceed as follows:

1. Refer to Changing the Speed and Mileage Unit on previous step.
2. Press SEL button to switch between “km/L” or “L/100km”.

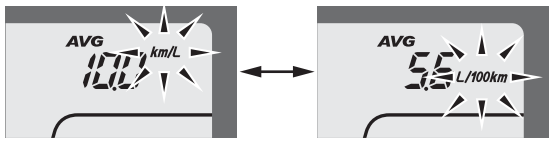


3. Press and hold SEL button. The fuel mileage unit is set, and then the display will return to the normal mode.

The established setting can also be set by stopping the engine.
The control is automatically switched from the setting mode to the normal mode if the button is not pressed for about 30 seconds. Even in this case, established setting is maintained.

# Before Riding

Before each ride, you need to make sure you and your CRF are both ready to ride. To help get you prepared, this section discusses how to evaluate your riding readiness, and what items you should check on your CRF.

For information about suspension and other adjustments, see page 139.

Are You Ready to Ride? ..... 16
Is Your Motorcycle Ready to Ride? ..... 17
Pre-ride Inspection ..... 17

# Are You Ready to Ride?

Before riding your CRF for the first time, we strongly recommend that you read this owner's manual, make sure you understand the safety messages, and know how to operate the controls.

Before each ride, it's also important to make sure you and your CRF are both ready to ride.

For information about suspension and other adjustments, see page 139.

Whether you're preparing for competition or for practice, always make sure you are:

- In good physical and mental condition
- Free of alcohol and drugs
- Wearing an approved helmet, eye protection, and other appropriate riding gear

Although complete protection is not possible, wearing the proper gear can reduce the chance or severity of injury when you ride.

**⚠ WARNING**

Not wearing a helmet increases the chance of serious injury or death in a crash.

Be sure you always wear a helmet, eye protection and other protective apparel when you ride.

Competitive riding can be tough on a motorcycle, so it's important to inspect your CRF and correct any problems you find before each ride. Check the following items (page numbers are at the right):

**⚠ WARNING**

Improperly maintaining this motorcycle or failing to correct a problem before riding can cause a crash in which you can be seriously hurt or killed.

Always perform a pre-ride inspection before every ride and correct any problems.

## Pre-ride Inspection

Check the following before each ride:

- Engine oil level ..... 64
- Fuel line for condition ..... 54
- Coolant for proper level ..... 66
- Cooling system and hoses for condition ..... 67
- Spark plug for proper heat range, carbon fouling and spark plug wire terminal for looseness ..... 80
- Air cleaner for condition and contamination ..... 69
- Clutch lever freeplay ..... 75
- Breather drain for cleaning ..... 71
- Steering head bearing and related parts for condition ..... 131
- Throttle operation ..... 73
- Tires for damage or improper inflation pressure ..... 121
- Spokes for looseness ..... 120
- Rim locks for looseness ..... 120
- Front and rear suspension for proper operation ..... 99, 115
- Front and rear brakes, check operation ..... 116
- Drive chain for correct slack and adequate lubrication ..... 124, 125
- Drive chain sliders and drive chain rollers for damage or wear ..... 124, 125
- Exhaust pipe/Muffler for looseness ..... 127
- Every possible part for looseness (such as cylinder head bolts, engine mounting bolts/nuts, axle nuts, handlebar holder bolts, fork bridge pinch bolts, drive chain adjuster, lock nuts, drive chain roller bolt/nut, wire harness connectors) ..... 170-172
- MIL operation ..... 10

BLANK PAGE

# Basic Operating Instructions

This section gives basic information on how to start and stop your engine as well as break-in guidelines.


Safe Riding Precautions ..... 20
Side Stand ..... 20
Starting & Stopping the Engine ..... 21
Fast Idle Knob ..... 21
Preparation ..... 21
Starting Procedure ..... 21
How to Stop the Engine ..... 22
Shifting Gears ..... 23
Braking ..... 24
Parking ..... 25
Post-ride Inspection ..... 26
Break-in Guidelines ..... 27

## Safe Riding Precautions

Before riding your CRF for the first time, please review the *Important Safety Precautions* beginning on page 2 and the previous section, titled *Before Riding*.

For your safety, avoid starting or operating the engine in an enclosed area such as a garage. Your CRF's exhaust contains poisonous carbon monoxide gas which can collect rapidly in an enclosed area and cause illness or death.

**⚠ WARNING**

Running the engine of your vehicle while in an enclosed or even partially enclosed area can cause a rapid build-up of toxic carbon monoxide gas.

Breathing this colorless, odorless gas can quickly cause unconsciousness and lead to death.

Only run your vehicle's engine when it is located in a well ventilated area outdoors.

## Side Stand

The side stand (1) is used to support your CRF while parked (page 25). To operate, push the side stand down. Slowly lean your CRF to the left until its weight rests on the side stand. Turn the handlebar fully to the left.
Before riding, raise the side stand.

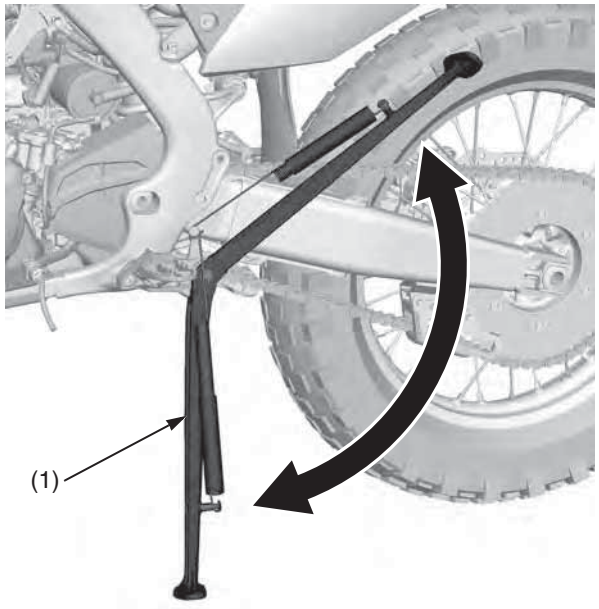


(1) side stand

Always follow the proper starting procedure described below.

Your CRF can be started with the transmission in gear by pulling in the clutch lever before operating the start button.

## Fast Idle Knob

The fast idle knob has two functions:
- When pulled out, the fast idle knob assists in first-time start-up for cold weather starting.
- When pushed in, it acts like an idle adjustment screw. Refer to *Idle Speed Adjustment* on page 74.

## Preparation

Make sure that the transmission is in neutral.

## Starting Procedure

Always follow the proper starting procedure described as follows.

Check the engine oil and coolant levels before starting the engine (pages 64, 66).

Cold Engine Starting
1. Shift the transmission into neutral.
2. If the temperature is 50°F (10°C) or below, pull the fast idle knob (1) fully up.

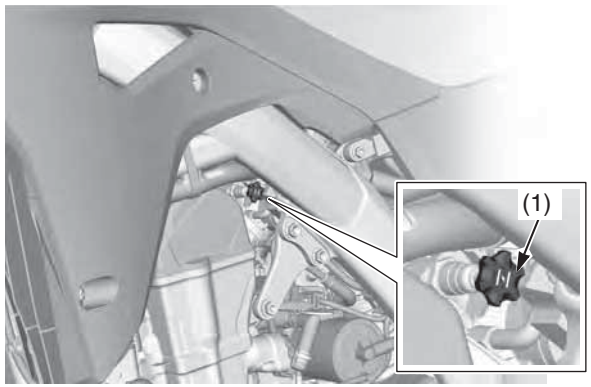


(1) fast idle knob

3. With the throttle closed.
   Pull the clutch lever all the way in, and depress the start button (2).

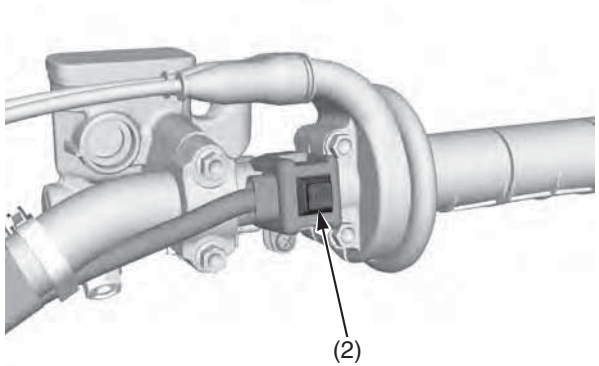


(2) start button

4. About a minute after the engine starts, push the fast idle knob back all the way to fully OFF. If idling is unstable, open the throttle slightly.

(cont'd)

Warm Engine Starting
1. Shift the transmission into neutral.
2. Pull the clutch lever and depress the start button. (Do not open the throttle.)

Starting the engine excessively charged with fuel by throttle blipping or other reasons
1. Shift the transmission into neutral.
2. With the throttle fully opened, pull the clutch and depress the start button for 5 seconds to discharge excessive fuel from the engine.
3. Pull the clutch lever and depress the start button. (Do not open the throttle.)

Snapping the throttle or fast idling for more than about 5 minutes may cause exhaust pipe and muffler discolorations.

When starting the engine, the MIL (amber) will stay on for 2 seconds, then go off. If the MIL indicator (1) does not come on or go off when it should, have your dealer check it for problems.

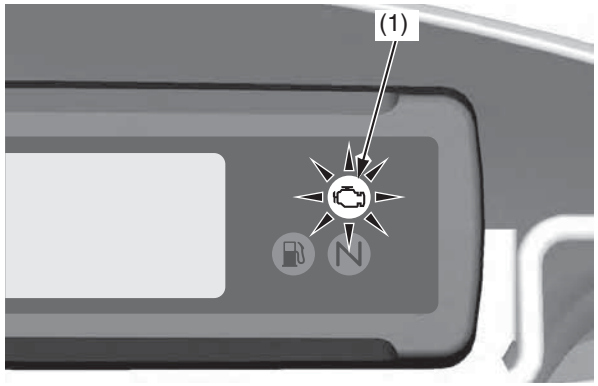


(1) MIL (amber) indicator

## How to Stop the Engine

Normal Engine Stop
1. Shift the transmission into neutral.
2. Push and hold the engine stop button (1) until the engine stops completely.

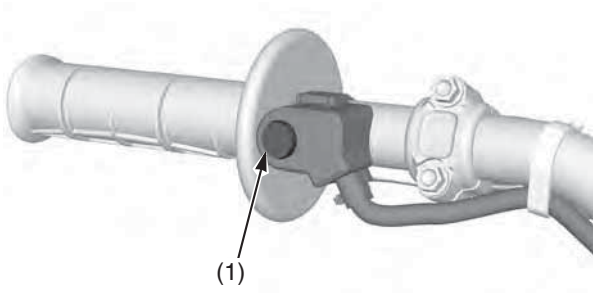


(1) engine stop button

Emergency Engine Stop
To stop the engine in an emergency, push and hold the engine stop button.

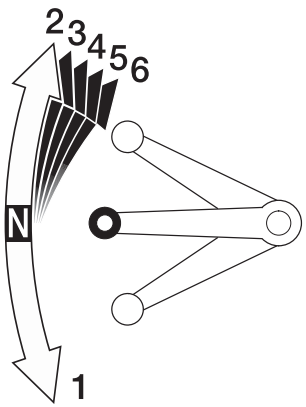


Your CRF has 6 forward gears in a one-down, five-up shift pattern.
To start riding, after the engine has been warmed and the side stand raised.

1. Close the throttle and pull the front brake lever in.
2. Pull the clutch lever all the way in.
3. Depress the shift lever from neutral down to first gear.
4. Release the front brake lever. Gradually open the throttle while you slowly release the clutch lever. If the engine rpm (speed) is too low when you release the clutch lever, the engine will stall.
   If the engine rpm (speed) is too high or you release the clutch lever too quickly, your CRF may lurch forward.
5. When you attain a moderate speed, close the throttle, pull the clutch lever in, and raise the shift lever. After shifting, release the clutch lever and apply the throttle.
6. To continue shifting up to each higher gear, repeat step 5.
7. To shift down to a lower gear, close the throttle, pull the clutch lever in, and depress the shift lever. After shifting, release the clutch lever and apply the throttle.

Remember to close the throttle and pull the clutch lever in completely before shifting.

**NOTICE**

*Improper shifting may damage the engine, transmission, and drive train.*

Learning when to shift gears comes with experience. Upshift to a higher gear or reduce throttle before engine rpm (speed) gets too high. Downshift to a lower gear before you feel the engine laboring (lugging) at low rpm.

**NOTICE**

*Downshifting can help slow your motorcycle, especially on downhills. However, downshifting when engine rpm is too high can cause engine damage.*

**NOTICE**

*To prevent transmission damage, do not coast or tow the motorcycle for long distances with the engine off.*

# Braking

To slow or stop, apply the front brake lever and rear brake pedal smoothly, while downshifting to match your speed. Gradually increase braking as you feel the brakes slowing your speed. To prevent stalling the engine, pull the clutch lever in before coming to a complete stop. For support, put your left foot down first, then your right foot when you are through using the rear brake pedal.

For maximum braking, close the throttle and firmly apply the front brake lever and rear brake pedal controls.

Applying the brakes too hard may cause the wheels to lock and slide, reducing control of your CRF. If this happens, release the brake controls, steer straight ahead until you regain control, then reapply the brakes more gently.

Generally, reduce your speed or complete braking before beginning a turn. Avoid braking or closing the throttle quickly while turning. Either action may cause one or both wheels to slip. Any wheel slip will reduce your control of your CRF.

When riding in wet or raining conditions, or on loose surfaces, the ability to maneuver and stop will be reduced. All of your actions should be smooth under these conditions. Rapid acceleration, braking, or turning may cause loss of control. For your safety, exercise extreme caution when braking, accelerating, or turning.

When descending a long, steep grade, use engine compression braking by downshifting, with intermittent use of both brakes.

When you brake to a stop, pull the clutch lever in before stopping completely to prevent stalling the engine. For support, put your left foot on the ground first, then your right foot when you have finished braking.

Lower the side stand to support your CRF.
Always choose a level surface to park.

# Post-ride Inspection

When you return home after riding, thoroughly clean your CRF and remove any dirt, mud, brush, rocks or other objects you may have picked up along the way.

After cleaning, carefully inspect your CRF for leaks or damage.

Be sure to lubricate the drive chain (page 125) to prevent rusting.

Help assure your CRF's future reliability and performance by paying extra attention to how you ride during the first operating day or 15 miles (25 km).
During this period, avoid full-throttle starts and rapid acceleration.

This same procedure should be followed each time when:

- piston is replaced
- piston rings are replaced
- cylinder is replaced
- crankshaft or crank bearings are replaced

BLANK PAGE

Keeping your CRF well maintained is absolutely essential to your safety. It's also a good way to protect your investment, get maximum performance, avoid breakdowns, and have more fun.

To help keep your CRF in good shape, this section includes a Maintenance Schedule for required servicing and step-by-step instructions for specific maintenance tasks. You'll also find important safety precautions, information on oils, and tips for keeping your CRF looking good.

An ECM system is used on this motorcycle; consequently, routine ignition timing adjustment is unnecessary. If you want to check the ignition timing, refer to an official Honda Service Manual (page 182).

For information about the exhaust emission and noise emission requirements of the U.S. Environmental Protection Agency (EPA) and the California Air Resouses Board (CARB), see page 173.

**Maintenance, replacement or repair of the emission control devices and systems may be performed by any motorcycle repair establishment or individual using parts that are "certified" to EPA standards.**

An optional tool kit may be available. Check with your dealer's parts department.

*Before You Service Your Honda*
The Importance of Maintenance ..... 30
Maintenance Safety ..... 31
Important Safety Precautions ..... 31
Maintenance Schedule ..... 32
General Competition Maintenance ..... 36
Before & After Competition Maintenance ..... 40
Between Motos & Practice Maintenance ..... 40
After Competition Maintenance ..... 41

*Service Preparations*
Maintenance Component Locations ..... 42
Seat ..... 43
Side Cover ..... 44
Fuel Tank ..... 45
Subframe ..... 49

*Service Procedures*
Fluids & Filters
Fuel System ..... 54
Engine Oil ..... 63
Coolant ..... 66
Air Cleaner ..... 69
Crankcase Breather ..... 71

Engine
Throttle ..... 72
Engine Idle Speed ..... 74
Clutch System ..... 75
Spark Plug ..... 80
Valve Clearance ..... 81
Piston/Piston Rings/Piston Pin ..... 90

Chassis
Suspension ..... 99
Front Suspension Inspection ..... 99
Rear Suspension Inspection ..... 115
Brakes ..... 116
Wheels ..... 120
Tires & Tubes ..... 121
Side Stand ..... 123
Drive Chain ..... 124
Exhaust Pipe/Muffler ..... 127
Spark Arrester ..... 129
Additional Maintenance Procedures ..... 131

Electrical
Battery ..... 133
Headlight & Taillight ..... 135

Appearance Care ..... 136

# The Importance of Maintenance

A well-maintained motorcycle is essential for safe, economical, and trouble-free riding. It will also help reduce air pollution. Careful pre-ride inspections and good maintenance are especially important because your CRF is designed to be ridden over rough off-road terrain.

To help you properly care for your CRF, this section of the manual provides a Maintenance Schedule. The service intervals in this schedule are based on average riding conditions.

More frequent service is needed if you subject your CRF to severe use or ride in unusually wet or dusty areas.

Frequent servicing of the air cleaner is especially important to help you avoid a possible costly engine repair.

If your CRF overturns or is involved in a crash, be sure your dealer inspects all major parts, even if you are able to make some repairs.

**⚠ WARNING**

Improperly maintaining this motorcycle or failing to correct a problem before you ride can cause a crash in which you can be seriously hurt or killed.

Always follow the inspection and maintenance recommendations and schedules in this owner's manual.

Remember, proper maintenance is your responsibility. Be sure to inspect your CRF before each ride and follow the Maintenance Schedule in this section.

This section includes instructions on how to perform some important maintenance tasks. Some of the most important safety precautions follow. However, we cannot warn you of every conceivable hazard that can arise in performing maintenance. Only you can decide whether or not you should perform a given task.

**⚠ WARNING**

Failure to properly follow maintenance instructions and precautions can cause you to be seriously hurt or killed.

Always follow the procedures and precautions in this owner's manual.

## Important Safety Precautions

- Make sure the engine is off before you begin any maintenance or repairs.
  This will help eliminate several potential hazards:

  **Carbon monoxide poisoning from engine exhaust.** Be sure there is adequate ventilation whenever you operate the engine.

  **Burns from hot motorcycle parts.** Let the engine and exhaust system cool before touching.

  **Injury from moving parts.** Do not run the engine unless instructed to do so.

- Read the instructions before you begin, and make sure you have the tools and skills required.

- To help prevent the motorcycle from falling over, park it on a firm, level surface, using the side stand, an optional workstand or a maintenance stand to provide support.

- To reduce the possibility of a fire or explosion, be careful when working around gasoline. Use only a non-flammable (high flash point) solvent such as kerosene –not gasoline– to clean parts. Keep cigarettes, sparks, and flames away from all fuel-related parts.

# Maintenance Schedule

To maintain the safety and reliability of your CRF, regular inspection and service is required as shown in the Maintenance Schedules – Regular OFF ROAD Use (non-competition) and Competition Use – that follow.

The Maintenance Schedule lists items that can be performed with basic mechanical skills and hand tools. Procedures for these items are provided in this manual.

The Maintenance Schedule also includes items that involve more extensive procedures and may require special training, tools, and equipment. Therefore, we recommend that you have your dealer perform these tasks unless you have advanced mechanical skills and the required tools. Procedures for items in this schedule are provided in an official Honda Service Manual available for purchase from your dealer (page 182).

Service intervals in the maintenance schedule for competition use are expressed in terms of motos and riding hours. To avoid overlooking required service, we urge you to develop a convenient way to record the number of motos and/or hours you ride.

If you do not feel capable of performing a given task or need assistance, remember that your Honda dealer knows your CRF best and is fully equipped to maintain and repair it. If you decide to do your own maintenance, use only Honda Genuine Parts or their equivalents for repair or replacement to ensure the best quality and reliability.

## MAINTENANCE SCHEDULE - REGULAR OFF-ROAD USE (NON-COMPETITION)

Perform the *Pre-ride Inspection* (page 17) at each scheduled maintenance period.
I: Inspect and Clean, Adjust, Lubricate or Replace if necessary. C: Clean. R: Replace. A: Adjust. L: Lubricate.

| FREQUENCY / ITEMS | | WHICHEVER COMES FIRST | | INITIAL MAINTENANCE | REGULAR MAINTENANCE INTERVAL | | | | Refer to Page: |
|---|---|---|---|---|---|---|---|---|---|
| | | ⇨ | mi | 100 | 600 | 1200 | 1800 | 2400 | |
| | | | Km | 150 | 1000 | 2000 | 3000 | 4000 | |
| | | NOTE | MONTH | 1 | 6 | 12 | 18 | 24 | |
| * | FUEL LINE | | | | | I | | I | 55 |
| ** | FUEL PUMP FILTER | | | | | | R | | 57 – 61 |
| * | THROTTLE OPERATION | | | | | I | | I | 73 |
| | AIR CLEANER | (NOTE 1) (NOTE 3) | | | C | C | C | C | 69, 70 |
| | CRANKCASE BREATHER | | | | I | I | I | I | 71 |
| | SPARK PLUG | | | | I | I | I | I | 80 |
| * | VALVE CLEARANCE | | | I | I | I | I | I | 81 – 89 |
| | ENGINE OIL | | | R | R | R | R | R | 64, 65 |
| | ENGINE OIL FILTER | | | R | R | R | R | R | 64, 65 |
| * | DECOMPRESSOR SYSTEM | | | I | I | I | I | I | 86 |
| ** | ENGINE IDLE SPEED | | | I | I | I | I | I | 74 |
| | RADIATOR COOLANT | (NOTE 2) | | | | I | | R | 66, 68 |
| * | COOLING SYSTEM | | | I | I | I | I | I | 67 |
| * | SECONDARY AIR SUPPLY SYSTEM | | | | | I | | I | – |
| | EVAPORATIVE EMISSION CONTROL SYSTEM | | | | | | | I | – |
| | DRIVE CHAIN | (NOTE 1) | | I, L | (I, L: every 300 mi (500 km) or 3 months) | | | | 124 – 126 |
| | DRIVE CHAIN SLIDER | | | | I | I | I | I | 124 |
| | BRAKE FLUID | (NOTE 2) | | | I | I | I | I | 117, 118 |
| | BRAKE PADS WEAR | | | | I | I | I | I | 119 |
| | BRAKE SYSTEM | | | I | I | I | I | I | 116 |
| * | HEADLIGHT AIM | | | | | I | | I | 135 |
| | CLUTCH SYSTEM | | | I | I | I | I | I | 75 – 76 |
| | SIDE STAND | | | | | I | | I | 123 |
| * | SUSPENSION | | | | | I | | I | 99, 115 |
| * | SPARK ARRESTER | | | (C: every 1,000 mi (1,600 km) or every 100 operating hours) | | | | | 129 |
| * | NUTS, BOLTS, FASTENERS | | | I | | I | | I | 132, 170 – 172 |
| ** | WHEELS/TIRES | | | I | I | I | I | I | 120 – 122 |
| ** | STEERING HEAD BEARINGS | | | I | | I | | I | 131 |

*Should be serviced by your dealer, unless the owner has proper tools and service data and is mechanically qualified. Refer to the official Honda Service Manual (page 182).

**In the interest of safety, we recommended these items be serviced only by your dealer.

NOTES:1. Service more frequently when ridden in wet or dusty conditions.
2. Replace every 2 years. Replacement requires mechanical skill.
3. Replace every 3 years.

## MAINTENANCE SCHEDULE – COMPETITION USE

All items should be checked before each off-road event. See your dealer unless you are mechanically qualified and have the proper tools.

**Damage from Competition use is not covered by the Distributor's Limited Warranty on your Honda.**
Perform the *Pre-ride Inspection* (page 17) at each scheduled maintenance period.
I: Inspect and Clean, Adjust, Lubricate or Replace if necessary. C: Clean. R: Replace. A: Adjust. L: Lubricate.

| FREQUENCY / ITEMS | NOTE | Each race or about 3.5 hours | Every 2 races or about 7.5 hours | Every 4 races or about 15.0 hours | Every 6 races or about 22.5 hours | Every 8 races or about 30.0 hours | Refer to Page: |
|---|---|---|---|---|---|---|---|
| FUEL LINE | (NOTE 6) | I | | | | R | 55 |
| FUEL PUMP FILTER | (NOTE 6) | | | | | R | 57 – 61 |
| THROTTLE OPERATION | | I | | | | | 73 |
| AIR CLEANER | (NOTE 1)<br>(NOTE 7) | C | | | | | 69, 70 |
| CRANKCASE BREATHER | | I | | | | | 71 |
| SPARK PLUG | | I | | | | | 80 |
| VALVE CLEARANCE/DECOMPRESSOR SYSTEM | (NOTE 4) | | | I | | | 81 – 89 |
| ENGINE OIL | (NOTE 3) | I | | R | | | 64, 65 |
| ENGINE OIL FILTER | (NOTE 3) | | | R | | | 64, 65 |
| ENGINE IDLE SPEED | | I | | | | | 74 |
| PISTON AND PISTON RINGS | | | | R | | | 92 – 94 |
| PISTON PIN | | | | R | | | 92 – 94 |
| RADIATOR COOLANT | (NOTE 2) | I | | | | | 66, 68 |
| COOLING SYSTEM | | I | | | | | 67 |
| DRIVE CHAIN | | I, L | R | | | | 124 – 126 |
| DRIVE CHAIN SLIDER | | I | | | | | 124 |
| DRIVE CHAIN ROLLER | | I | | | | | 125 |
| DRIVE SPROCKET | | I | | | | | 126 |
| DRIVEN SPROCKET | | I | | | | | 126 |
| BRAKE FLUID | (NOTE 2) | I | | | | | 117, 118 |
| BRAKE PADS WEAR | | I | | | | | 119 |
| BRAKE SYSTEM | | I | | | | | 116 |
| CLUTCH SYSTEM | | I | | | | | 75 – 79 |
| CONTROL CABLES | | I, L | | | | | 131 |
| EXHAUST PIPE/MUFFLER | | I | | | | | 127 – 129 |
| SUSPENSION | | I | | | | | 99, 115 |
| SWINGARM/SHOCK LINKAGE | | | L | | | | 39, 115 |
| FORK OIL | | | | | R | | 102, 103, 109 – 115 |
| NUTS, BOLTS, FASTENERS | | I | | | | | 132, 170 – 172 |
| WHEELS/TIRES | | I | | | | | 120 – 122 |
| STEERING HEAD BEARINGS | | | | | I | | 131 |

WE RECOMMEND THESE ITEMS BE SERVICED BY REFERRING TO AN OFFICIAL HONDA SERVICE MANUAL.
This maintenance schedule is based upon average riding condition. Machine subjected to severe use require more frequent servicing.

NOTES:
1. Clean after every moto for dusty riding condition.
2. Replace every 2 years. Replacement requires mechanical skill.
3. Replace after the first break-in ride.
4. Inspect after the first break-in ride.
5. Replace the engine oil, if the clutch discs and plates are replaced.
6. Replace every year.
7. Replace 3 years.

# Maintenance Record

Keeping an accurate maintenance record will help ensure that your motorcycle is properly maintained. Retain detailed receipts to verify the maintenance was performed. If the motorcycle is sold, these receipts should be transferred with the motorcycle to the new owner. Make sure whoever performs the maintenance completes this record. All scheduled maintenance, including the 100 mile (150 km) or 1 month initial maintenance, is considered a normal owner operating cost and will be charged for by your dealer. Use the space under Notes to record anything you want to remind yourself about or mention to your dealer.

| Miles (km) or Month | Odometer | Date | Performed By: | Notes |
|---|---|---|---|---|
| 100 (150) or 1 | | | | |
| 600 (1,000) or 4 | | | | |
| 1,200 (2,000) or 8 | | | | |
| 1,800 (3,000) or 12 | | | | |
| 2,400 (4,000) or 16 | | | | |
| 3,000 (5,000) or 20 | | | | |
| 3,600 (6,000) or 24 | | | | |
| 4,200 (7,000) or 28 | | | | |
| 4,800 (8,000) or 32 | | | | |
| 5,400 (9,000) or 36 | | | | |
| 6,000 (10,000) or 40 | | | | |
| 6,600 (11,000) or 44 | | | | |
| 7,200 (12,000) or 48 | | | | |
| 7,800 (13,000) or 52 | | | | |

# General Competition Maintenance

Perform maintenance on firm, level ground using the side stand, an optional workstand, or equivalent support.

When tightening bolts, nuts or screws, start with the larger diameter or inner fasteners, and tighten them to the specified torque using a crisscross pattern.

Use Honda Genuine Parts or their equivalents when servicing your CRF.

Clean parts in non-flammable (high flash point) cleaning solvent (such as kerosene) when disassembling. Lubricate any sliding surfaces, O-rings, and seals before reassembling. Grease parts by coating or filling where specified.

After any engine disassembly, always install new gaskets, O-rings, cotter pins, piston pin clips, snap rings, etc. when reassembling. After reassembly, check all parts for proper installation and operation.

**All Pre-ride Inspection Items**
Refer to *Pre-ride Inspection* on page 17.

**Spark Plug**
Some non-resistor plugs may cause ignition problems. Refer to the recommendations elsewhere in this manual for specific types so you will be sure to use the proper reach and heat range. Replace periodically as specified in the Maintenance Schedule (pages 33, 34).

**Spark Plug Cap**
Install a small plastic wire band around the spark plug cap to reduce any possibility of it loosening or of water penetration.

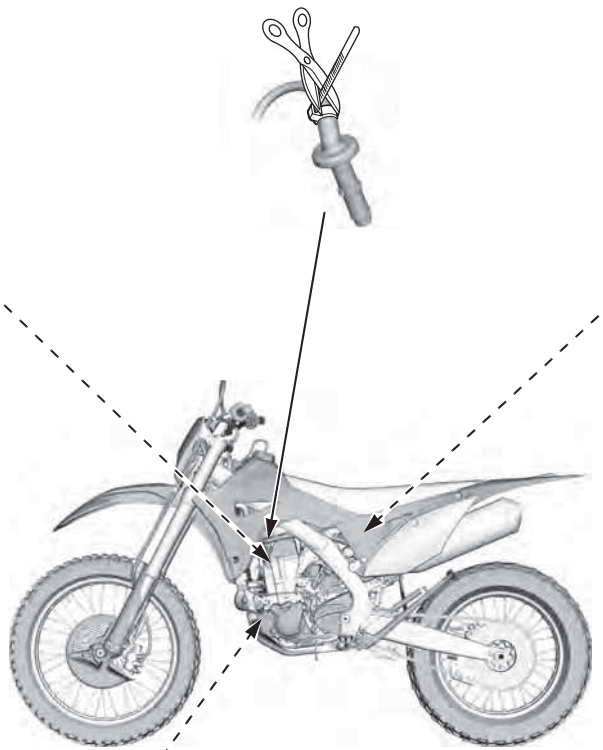

**Air Cleaner**
Clean and oil your air cleaner regularly because the volume of air able to pass through it has a great effect on performance. Both engine performance and long term durability may be affected by an air cleaner that has deteriorated and allows dirt to pass. Inspect the air cleaner closely each time it's serviced for evidence of small tears or seam separation. Keep a spare air cleaner oiled and ready to install, sealed in a plastic bag. Riding in dusty conditions may require servicing the air cleaner or replacing it with a pre-serviced air cleaner between motos. Be careful not to over oil the air cleaner. While it is important to oil the air cleaner thoroughly, over oiling will cause an overall rich running condition, probably more noticeable off idle and in low rpm performance. Follow the servicing instructions in the Maintenance section. Use Pro Honda Foam Air Filter Oil or an equivalent. Be sure to grease the air cleaner flange where it contacts the air cleaner housing. Pro Honda Foam Air Filter Sealer or an equivalent is handy for this because any dirt that penetrates this sealing area will show up clearly (page 69).
Use the Honda Genuine air cleaner or an equivalent air cleaner specified for your model.
Using the wrong Honda air cleaner or a non-Honda air cleaner which is not of equivalent quality may cause premature engine wear or performance problems.

**Engine Oil and Filter**
Drain and replace engine oil often to ensure the greatest service life of the piston, cylinder, crankshaft, transmission and clutch.
Also replace engine oil filter often to ensure the greatest service life. Frequent changes will also assure consistent performance of power, response, both shifting and clutch action (page 64).

# General Competition Maintenance

**Handgrips**
Always use Honda Bond A, Pro Honda Handgrip Cement when replacing handgrips.
Refer to an official Honda Service Manual (page 182) for installation instructions.

**Throttle Grip/Handlebar Grip**
Right throttle grip: Align the index mark on the throttle grip with the index mark of the throttle pipe.
Left handlebar grip: Align the index mark on the left handlebar grip with the paint mark on the handlebar.

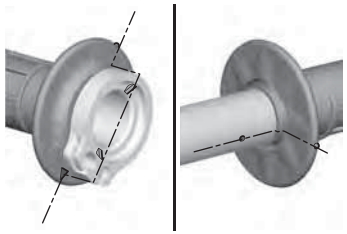

For added security, you may choose to bind the handgrips to the handlebar and throttle pipe with safety wires to prevent the possibility of them loosening. Position the twisted wire ends away from your palms and be sure to bend the wire ends well into the handgrip rubber so they will not snag your glove.

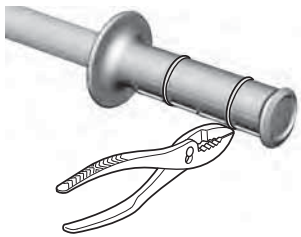

**Cylinder head/Cylinder**
Put a little grease on the dowel pins of the cylinder head and cylinder to prevent corrosion from dissimilar metals. The tolerances are quite tight, so it's important to keep these dowels absolutely clean (pages 90, 92).

**Gaskets**
Always use new gaskets when reassembling components.

**Fuel Line**
Refer to *Fuel Line Inspection* on page 55.
Check the fuel line for deterioration, damage, or leakage.
Replace the fuel line every year.

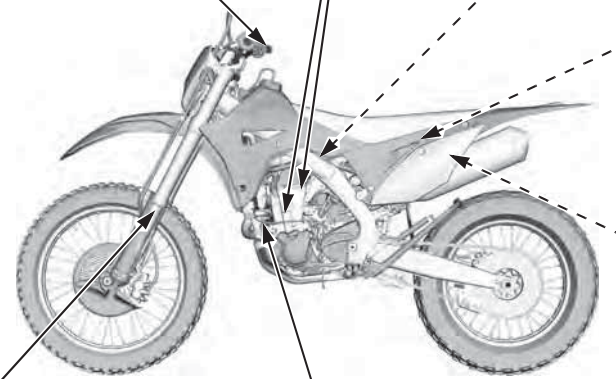

**Battery**
The start button uses current from the battery.
Limited operation also allows the battery to discharge. If you do not ride frequently, we recommend that you charge the battery frequently (see *Battery Charging* on page 134).
If you do not expect to ride your CRF for at least 2 weeks, we recommend you remove the battery – or at least disconnect the battery cables (negative cable first).

**Fuse**
Check the fuse before looking elsewhere for the cause of an electrical problem.

**Electrical Connectors**
Clean electrical connectors and wrap them with electrical tape to reduce the possibility of unwanted disconnections, water shorts or corrosion.

**Frame**
Because your CRF is a high-performance machine, the frame should not be overlooked as part of your overall competition maintenance program. Periodically inspect the frame closely for possible cracking or other damage. It makes good racing sense.

**Fork Oil/Performance**
Disassemble, clean and inspect the fork and replace the oil regularly. Contamination due to the tiny metal particles produced from the normal action of the fork, as well as normal oil breakdown, will deteriorate the performance of the suspension. Refer to an official Honda Service Manual (page 182). Use only Pro Honda HP Fork Oil, SS-19 or an equivalent which contains special additives to assure maximum performance of your CRF's front suspension.

**Engine Mounting Bolts and Nuts**
Make sure the engine mounting bolts and nuts are tightened to the proper torque specification.

**Suspension Linkage Lubrication**
Disassemble, clean, inspect and lubricate all suspension linkage pivot bearings with molybdenum disulfide grease (containing more than 3% molybdenum disulfide additive Moly Paste 77) after each 15.0 hours of running time in order to maintain proper suspension performance and minimize component wear.

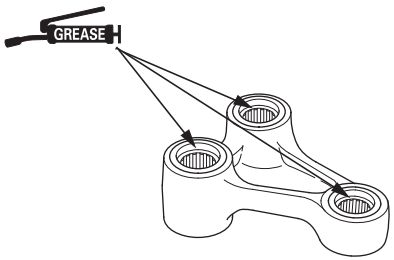


**Swingarm Pivot Lubrication**
Clean, inspect and lubricate the swingarm and suspension linkage pivots with molybdenum disulfide grease (containing more than 3% molybdenum disulfide additive Moly Paste 77). Be sure all of the dust seals are in good condition.

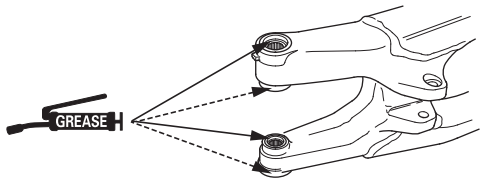


**Swingarm**
Do not attempt to weld or otherwise repair a damaged swingarm. Welding will weaken the swingarm.

**Footpegs**
Worn footpeg teeth can be repaired by filing the grooves between the teeth with a triangular shaped file.
Be aware that filing them too sharp will reduce boot sole lifespan. Sharpen only the points of the teeth. Filing the grooves deeper will weaken the footpegs. Be sure the pegs are free to pivot freely and that the pivot pin retaining cotter pins are in good condition.

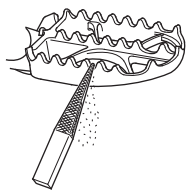

**Brake Fluid Replacement**
Refer to *Brake Pad Wear* on page 119.
Brake Caliper Inspection: Be sure both the front and rear calipers are able to move freely on the caliper pin and caliper bracket pins. Check pad thickness periodically and replace the pads when minimum thickness is reached. If the brakes fade when they are hot, inspect the pads for glazing or damage, and replace if necessary.
Brake Fluid Replacement: Refer to an official Honda Service Manual (page 182) for brake fluid replacement instructions. Replace the brake fluid in the brake system every 2 years. Replace the fluid more frequently if you subject your brakes to severe use. Heavy braking heats the brake fluid and it may deteriorate sooner than expected. Any type of riding, that requires frequent use of the brakes, such as in tight woods, can shorten the service life of brake fluid.

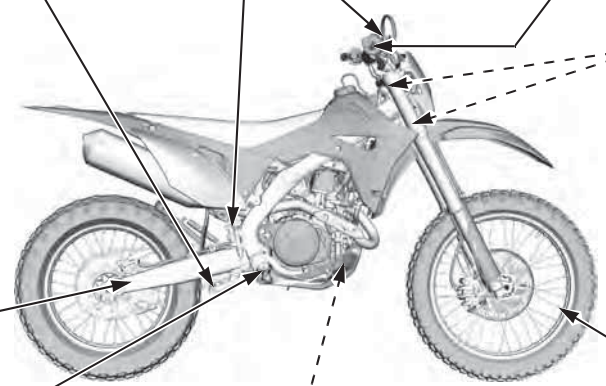

**Bleed Hole**
After every motos, check the bleed hole below the water pump cover for leakage. Clean away any clogged dirt or sand, if necessary. Check for signs of seal leakage. If water leaks through the bleed hole, replace the mechanical seal. If oil leaks through the bleed hole, replace the oil seal. Make sure that there is no continuous coolant leakage from the bleed hole while operating the engine. A small amount of coolant weeping from the bleed hole is normal. See an official Honda Service Manual or consult your dealer for replacing the mechanical seal or oil seal. Both seals should be replaced at the same time.

**Throttle Control**
Remove the throttle control every few rides, clean the inside of the throttle pipe and handlebar thoroughly. Inspect the cable carefully for kinks or other damage that may restrict throttle control in anyway. Move the handlebar from lock to lock to be sure there is no cable interference. Make certain the throttle operation is perfect after servicing and inspecting.

**Steering Head Bearings**
Periodically clean, inspect and regrease the steering head bearings — especially if wet, muddy or extremely dusty courses are encountered often.
Use urea based multi-purpose grease designed for high temperature, high pressure performance (example: EXCELITE EP2 manufactured by KYODO YUSHI, Japan or equivalent).

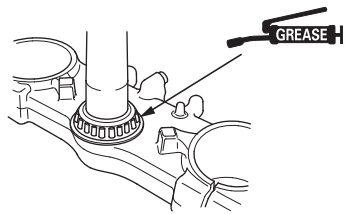


**Spokes**
Check spoke tension frequently between the first few rides. As the spokes, spoke nuts and rim contact points seat-in, the spokes may need to be retightened. Once past this initial seating-in period, the spokes should hold their tension. Still, be sure your moto maintenance program includes checking spoke tension and overall wheel condition on a regular basis (page 120).

**Nuts, Bolts, Etc.**
Application of a thread locking agent to essential fasteners offers added assurance and security. Remove the nuts, clean the threads of both the nuts and bolts, apply Pro Honda Hondalock or an equivalent and tighten to the specified torque.

## Between Motos & Practice Maintenance

After practice or between motos you have a chance to make additional checks and adjustments.

- Clean accumulated dirt from under the fenders and off the wheels, suspension components, handgrips, controls, and footpegs. A stiff, nylon parts cleaning brush works well.
- Check tire air pressure.
- Check spoke tension, and make sure the rim locks are secure.

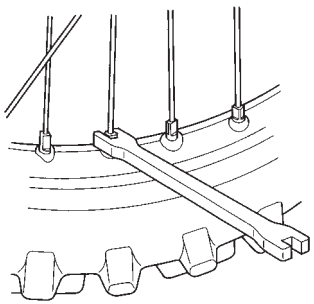

- Check to make sure the sprocket bolts and nuts are secure.
- Clean the sides of the drive chain with a stiff, nylon parts-cleaning brush. Lubricate and adjust the chain as necessary.

Do not perform maintenance while engine is running. Injury to your fingers or hands may result.

- After adjustment, check that the chain adjuster index marks (1) are in the same position on each side. This will ensure that the rear wheel is in proper alignment and allow maximum performance from the rear disc brake. Maintaining proper wheel alignment will also extend brake pad wear.

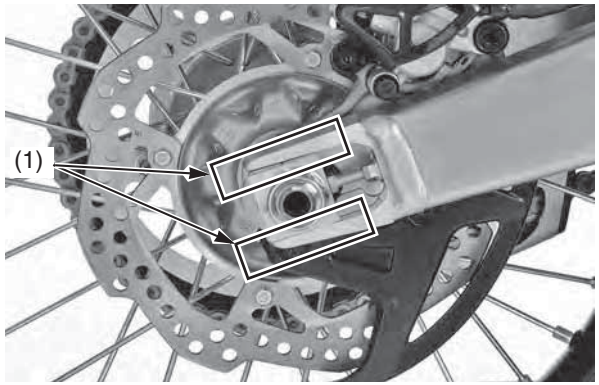


(1) chain adjuster index marks

- Suspend the front wheel above the ground and use the pressure release screws (2) to release the built-up pressure in the forks. This pressure is caused by normal fork action while riding.

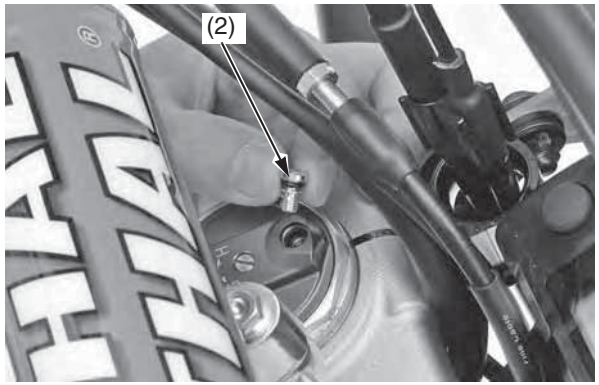


(2) pressure release screw

## After Competition Maintenance

It is important to the long term performance of your CRF to practice a consistent maintenance program. Right after the event is a good time to begin your next maintenance cycle.

After Moto Lubrication
Apply a light coating of rust-inhibiting oil to the drive sprocket and any steel portions of the chassis or engine where the paint has worn away.
This will prevent rusting of the exposed metal. Apply rust-inhibiting oil more heavily if the event was particularly wet or muddy. Take care to avoid spraying any oil near the brake pads or the brake discs.

Take care to prevent catching your fingers between the chain and sprocket.

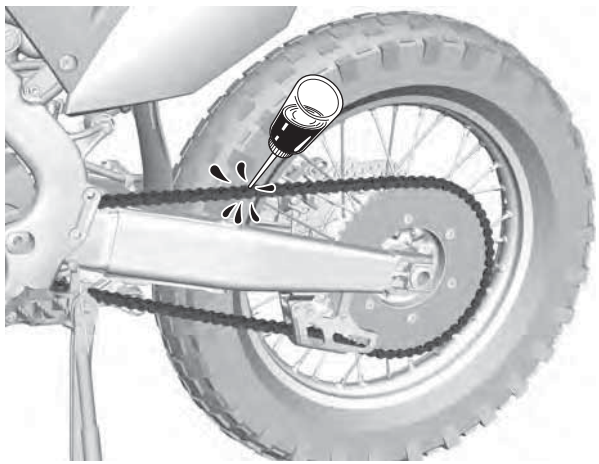

Routine Cleaning
If your CRF is only slightly dirty, it is best to clean it by hand with the aid of a stiff bristled nylon brush and some clean rags.

Take care to prevent catching your fingers between the chain and sprocket.

A variety of reasonably priced cleaning brushes are available from variety, drug, food, and hardware stores. Some of these brushes are extremely useful in removing dirt from the many tight contours of the metal pieces of your CRF. Avoid using stiff, abrasive brushes on the plastic or rubber parts.

If your CRF was exposed to sea air or salt water, rinse it as soon as possible after the event, dry it, and apply a spray lubricant to all metal parts.

If you decide to wash your CRF or use cleaners, refer to *Appearance Care* (page 136).

# Maintenance Component Locations

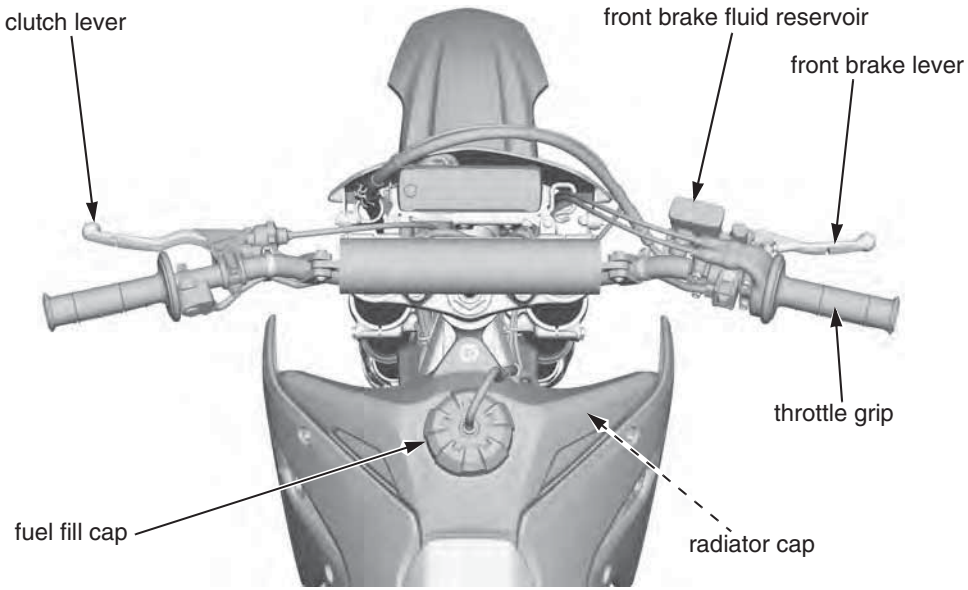


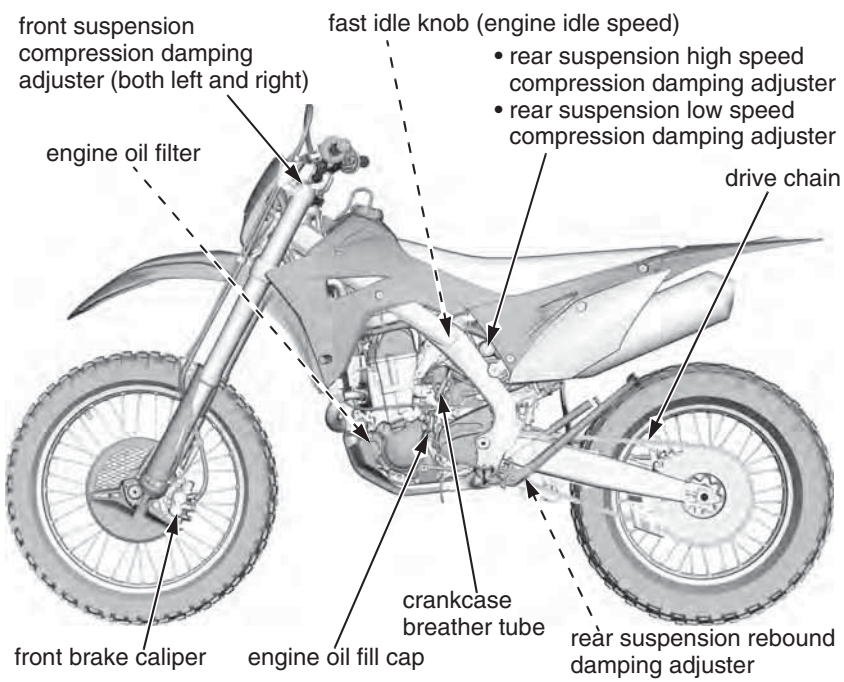


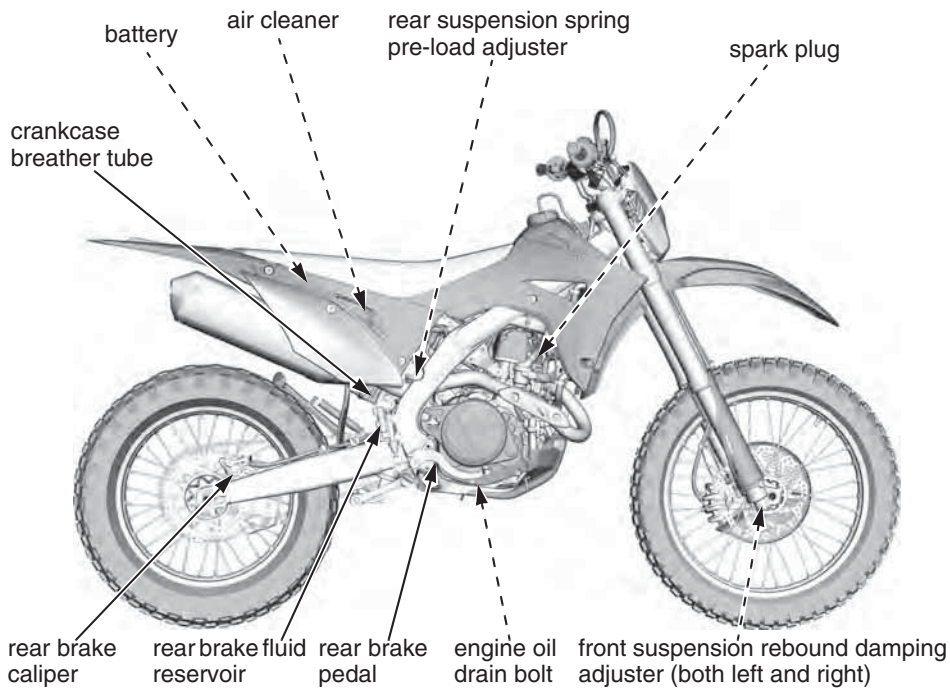

Refer to *Important Safety Precautions* on page 31.

Removal
1. Remove the seat mounting bolts (1).
2. Remove the seat (2) by pulling it backward.

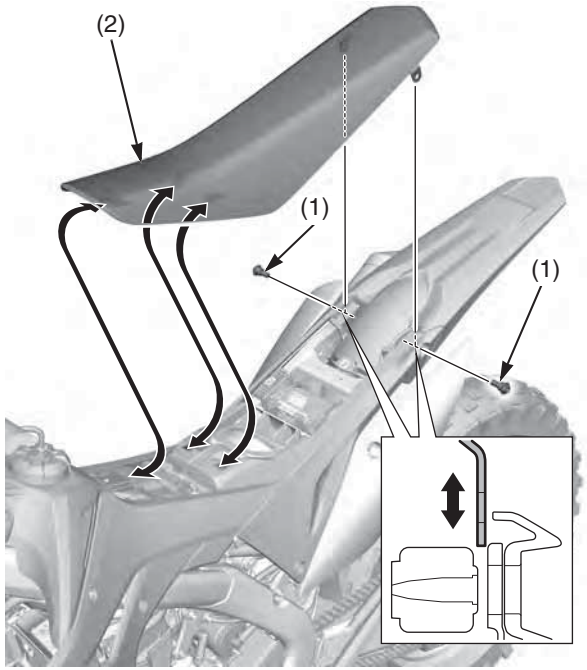


(1) seat mounting bolts (2) seat

Installation
1. Install the seat while aligning the seat front prong (1) with the slot (2) of the fuel tank and seat center prongs (3) with the seat support base slots (4).
2. Install and tighten the seat mounting bolts (5) to the specified torque:
   19 lbf·ft (26 N·m, 2.7 kgf·m)

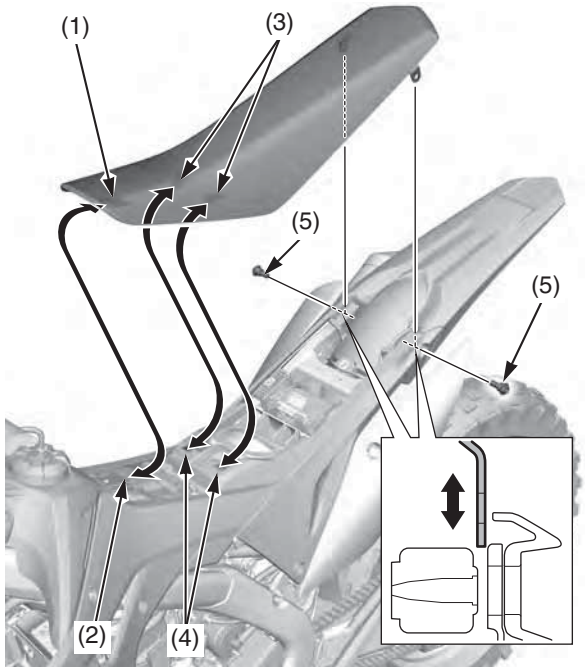


(1) seat front prong
(2) slot
(3) seat center prongs
(4) seat support base slots
(5) seat mounting bolts

# Side Cover

Refer to *Important Safety Precautions* on page 31.

Removal

1. Remove the seat (page 43).
2. Remove the side cover (1) by removing the bolts (2).

The right and left side covers can be removed in the same manner.

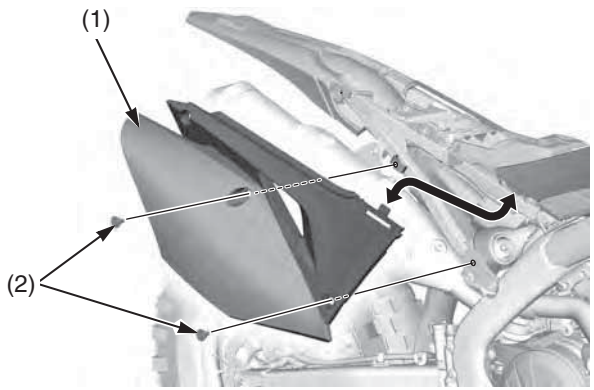


(1) side cover (2) bolts

Installation

1. Install the side cover (1), and then tighten the bolts (2) to the specified torque:
   7 lbf·ft (10 N·m, 1.0 kgf·m)

The right and left side covers can be installed in the same manner.

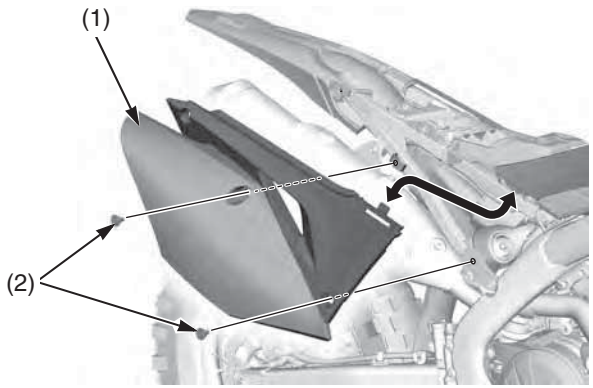


(1) side cover (2) bolts

2. Install the seat (page 43).

Refer to *Important Safety Precautions* on page 31.

Removal

1. Remove the seat (page 43).
2. Remove the shroud A bolt (1), shroud B bolt (2) and shroud C bolt (3).
3. Slide the shroud (4) toward the up to separate them from the side cover (5), and then remove the shroud.

The right and left shrouds can be removed in the same manner.

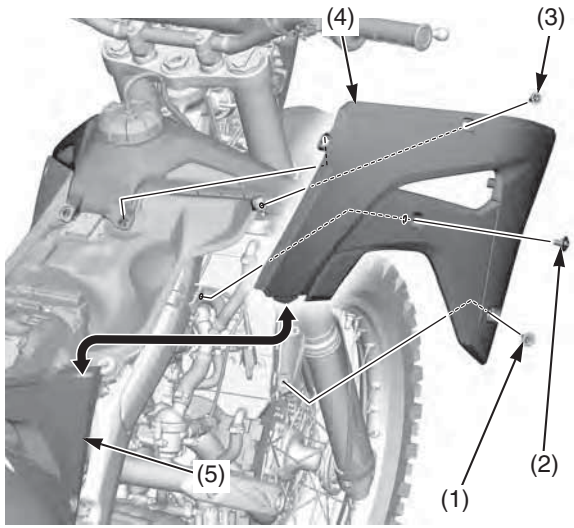


(1) shroud A bolt
(2) shroud B bolt
(3) shroud C bolt
(4) shroud
(5) side cover

4. Release the breather tube (6) from the tube guide (7) on the top shelter (8).
5. Disconnect the breather tube (6) at the tube joint (9).

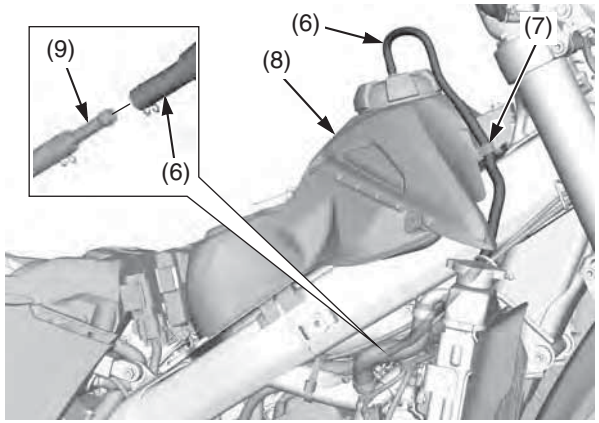


(6) breather tube
(7) tube guide
(8) top shelter
(9) tube joint

6. Remove the fuel tank bolts (10) and washers (11).

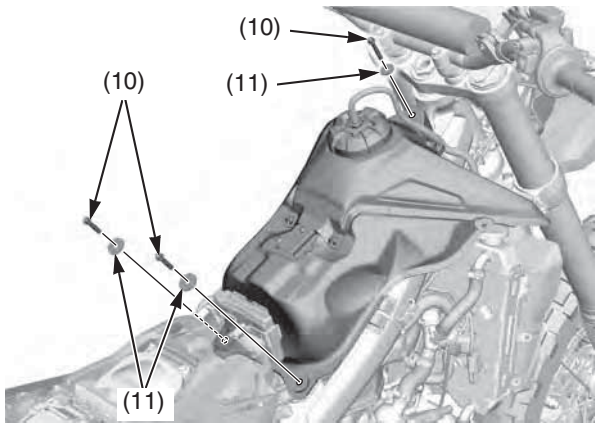


(10) fuel tank bolts
(11) washers

7. Lift the fuel tank (12) out of the frame to the left of the frame.

Do not support the fuel tank by the fuel feed hose (13).

**NOTICE**

*The fuel tank is made of titanium material. Since the fuel tank has not been painted, it might be discolored with mud and dust.*
*To remove mud or dust, use a sponge or soft cloth and a stainless steel kitchen detergent, then rinse well clean water.*
*After washing, rinse with plenty of water and dry with a clean cloth.*

**⚠ WARNING**

Gasoline is highly flammable and explosive.
You can be burned or seriously injured when handling fuel.
- Stop the engine and keep heat, sparks and flame away.
- Handle fuel only outdoors.
- Wipe up spills immediately.

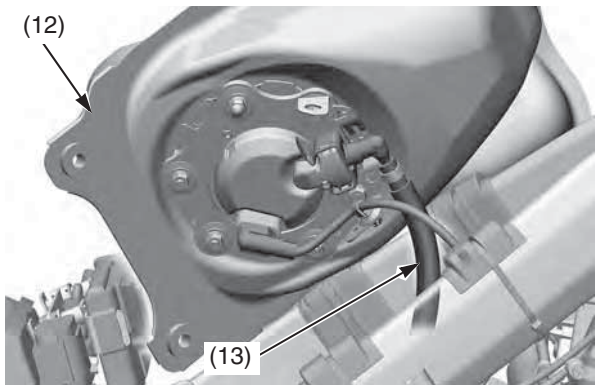


(12) fuel tank
(13) fuel feed hose

(cont'd)

8. Disconnect the fuel pump connector (14) and remove the harness band clip (15).
9. Reposition the fuel tank and start the engine and let it idle until the engine stalls.

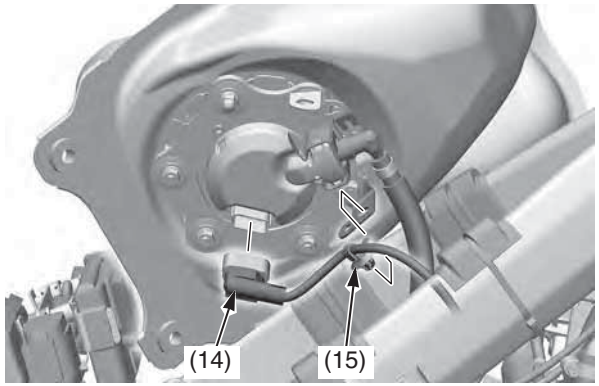


(14) fuel pump connector (15) harness band clip

10. Lift the fuel tank (12) out of the frame. Remove the fuel quick connect fitting cover (16) from the fuel pump (17).

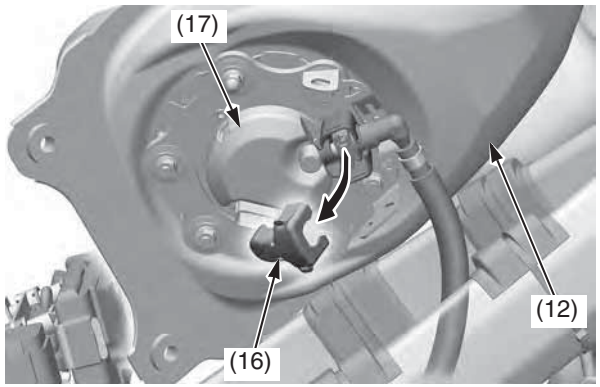


(12) fuel tank
(16) fuel quick connect fitting cover
(17) fuel pump

11. Check the fuel quick connect fitting (18) for dirt, and clean if necessary.
12. Place a shop towel (19) over the fuel quick connect fitting.

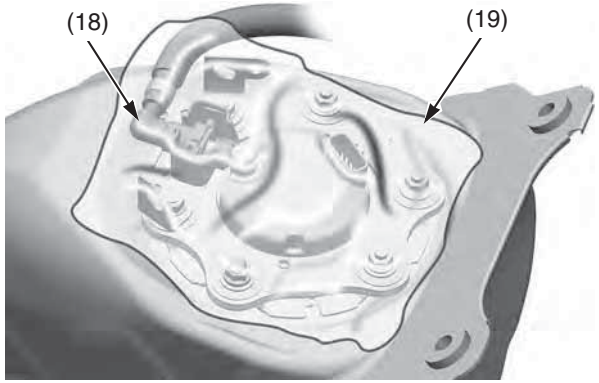


(18) fuel quick connect fitting (19) shop towel

13. Unlock the slide retainer (20) of the quick connect fitting by completely pulling it up. Release the fuel quick connect fitting (18) from the fuel joint (21) while holding the connector housing (22), then remove the fuel tank (12).
    Use a shop towel to absorb the remaining fuel in the fuel feed hose.
    - Be careful not to damage the hose or other parts.
    - Do not use tools.
    - Dirt intruding into the connector housing may cause slide retainer sticking.

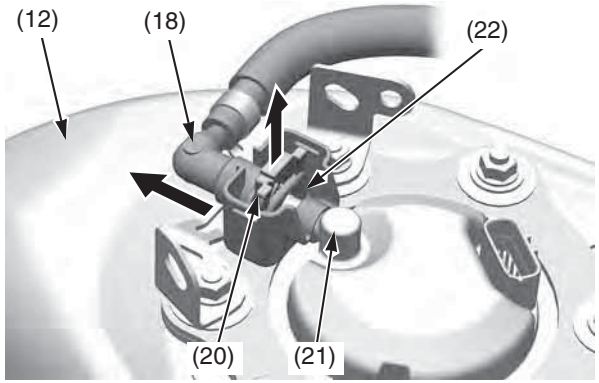


(12) fuel tank
(18) fuel quick connect fitting
(20) slide retainer
(21) fuel joint
(22) connector housing

14. Check for interference between the frame and tank, and adjust the cushion rubbers (23) on the both sides of the frame if necessary.

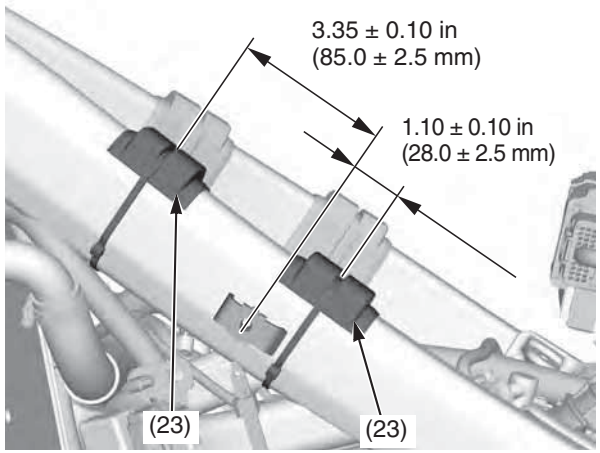


(23) cushion rubbers

**NOTICE**

*Do not ride your CRF in state which the cushion rubbers have been removed.*
*It may cause the fuel tank cracking.*

Installation

1. Make sure the rubber cover (1) is onto the fuel joint (2) of the fuel pump as shown.

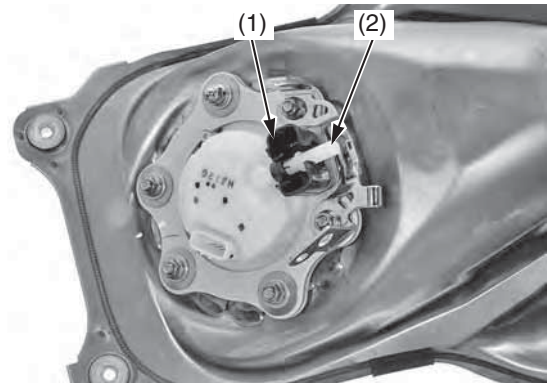


(1) rubber cover
(2) fuel joint

2. Be sure that the slide retainer (3) is completely pulled up before connecting the quick connect fitting.
   - Do not bend or twist the fuel feed hose.
   - Do not reuse the kinked or damaged fuel hose.
   - Do not use gloves or a shop towel while installing the quick connect fitting.

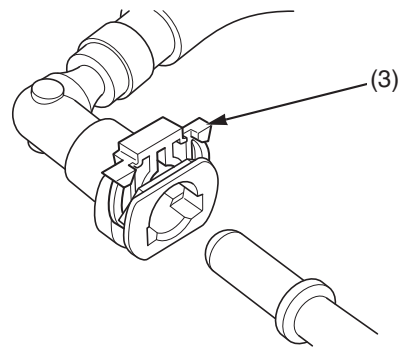


(3) slide retainer

3. Place the fuel tank (4) onto the frame.
4. Connect the quick connect fitting to the fuel joint (2) until you hear the “click” while holding the connector housing (5).
   If it is hard to connect, put a small amount of engine oil on the pipe end of the fuel joint.

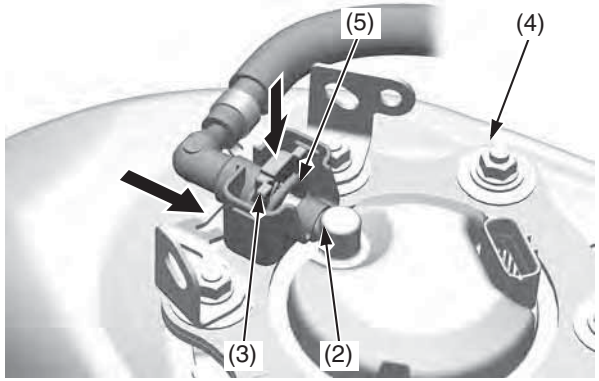


(2) fuel joint
(3) slide retainer
(4) fuel tank
(5) connector housing

5. Make sure the connection is secure and that the slide retainer is firmly locked into place; check visually and by pulling the connector housing.

(cont’d)

6. Install the fuel quick connect fitting cover (6). Be sure the rubber cover (1) is properly installed between the fuel quick connect fitting cover and fuel pump.

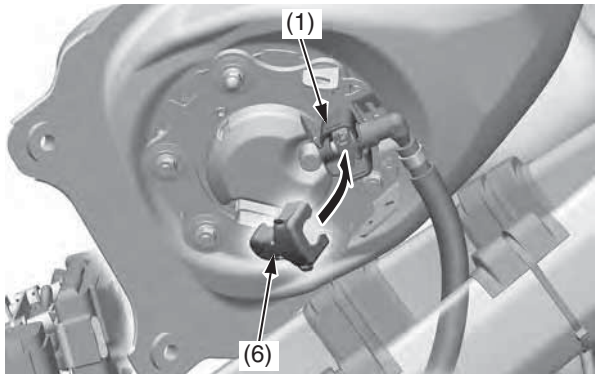


(1) rubber cover
(6) fuel quick connect fitting cover

7. Install the harness band clip (7) to the stopper cable guide (8).
   Connect the fuel pump connector (9).

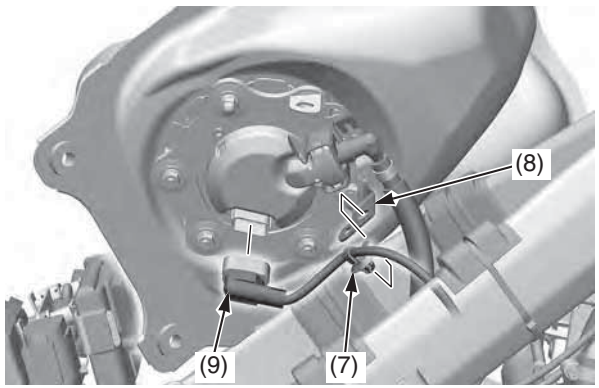


(7) harness band clip
(8) stopper cable guide
(9) fuel pump connector

8. Install the fuel tank (4) into the frame. Install the washers (10) and fuel tank bolts (11), then tighten the bolts to the specified torque.
   7 lbf·ft (10 N·m, 1.0 kgf·m)

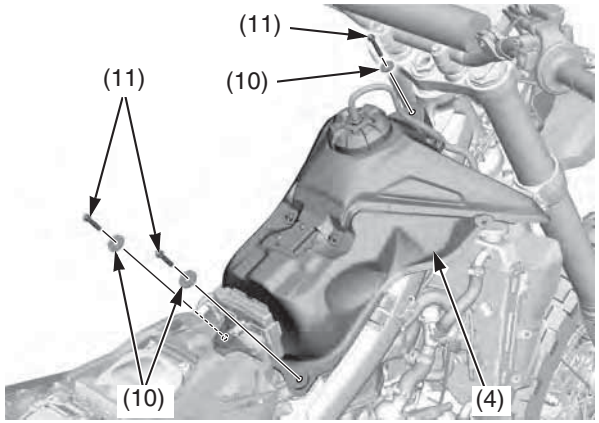


(4) fuel tank
(10) washers
(11) fuel tank bolts

9. Connect the breather tube (12) to the tube joint (13). Install the breather tube to the tube guide (14) onto the top shelter (15).

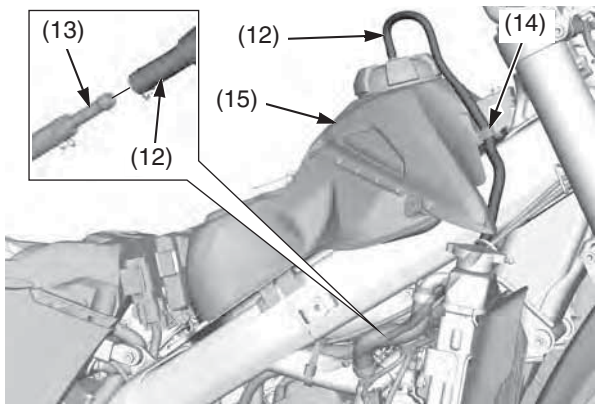


(12) breather tube
(13) tube joint
(14) tube guide
(15) top shelter

10. Slide the shroud (16) toward the down so that the shroud tab (17) and the slot (18) on the side cover (19) is aligned.
11. Install the shroud C bolt (20), B bolt (21) and shroud A bolt (22).
    Tighten the shroud A and B bolts to the specified torque:
    7 lbf·ft (10 N·m, 1.0 kgf·m)
    Tighten the shroud C bolt to the specified torque:
    3.8 lbf·ft (5.2 N·m, 0.5 kgf·m)

    The right and left shrouds can be installed in the same manner.

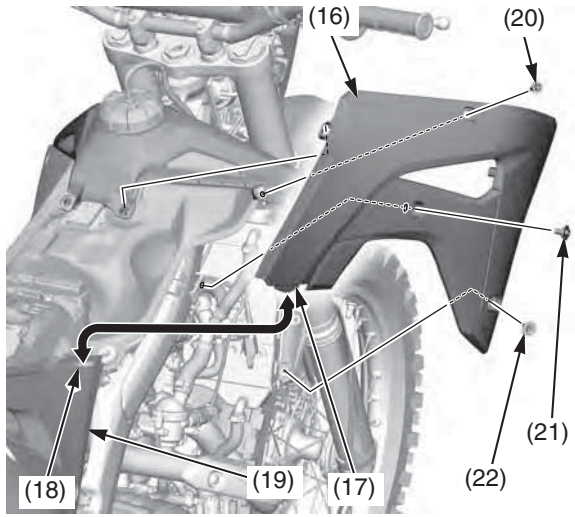


(16) shroud
(17) tab
(18) slot
(19) side cover
(20) shroud C bolt
(21) shroud B bolt
(22) shroud A bolt

12. Install the seat (page 43).

Refer to *Important Safety Precautions* on page 31.

Removal

1. Remove the battery (page 133).
2. Remove the fuel tank (page 45).
3. Remove the muffler (page 127).
4. Remove the left side cover (page 44).
5. Remove the ECM (1) from the ECM stay (2).
6. Remove the starter relay (3) from the seat support base (4).

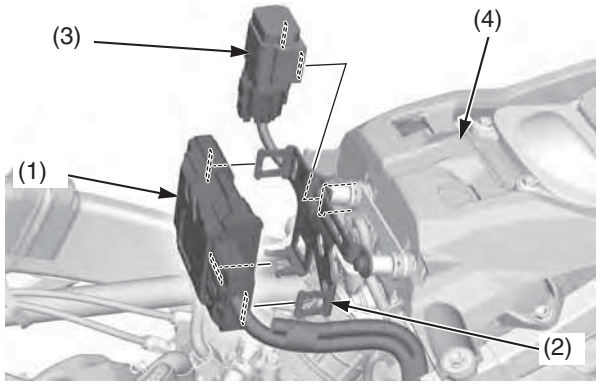


(1) ECM
(2) ECM stay
(3) starter relay
(4) seat support base

7. Remove the stay mounting bolts (5), ECM stay (2), collars A (6), collars B (7), bank angle sensor assembly (8) and washers (9).

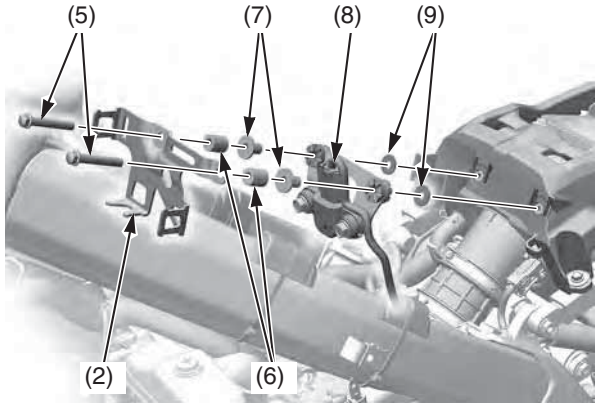


(2) ECM stay
(5) stay mounting bolts
(6) collars A
(7) collars B
(8) bank angle sensor assembly
(9) washers

8. Remove the seat support base mounting bolts (10) and collars (11). Release the hooks (12) from the seat rail, then remove the seat support base (4) from the subframe (13).

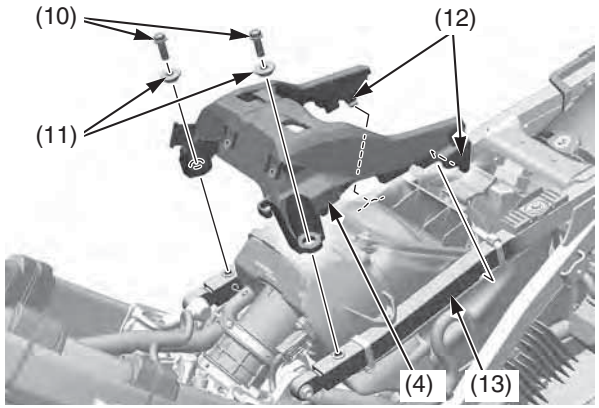


(4) seat support base
(10) bolts
(11) collars
(12) hooks
(13) subframe

9. Disconnect the IAT sensor connector (14). Disconnect the crankcase breather tube (15) and air injection air tube (16) from the air cleaner housing (17).
   Loosen the connecting tube band screws (18).

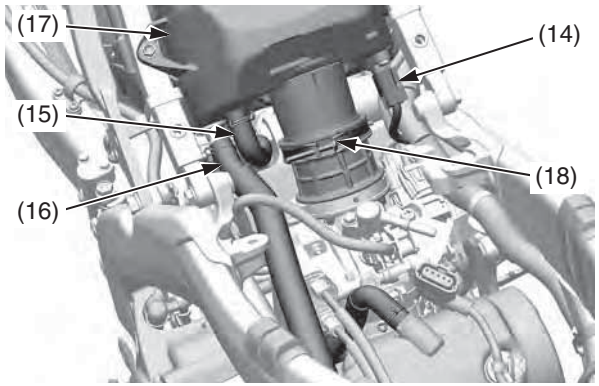


(14) IAT sensor connector
(15) crankcase breather tube
(16) air injection air tube
(17) air cleaner housing
(18) connecting tube band screw

10. Remove the negative (-) battery cable bands (19), then remove the negative (-) battery cable (20) from the subframe (13).

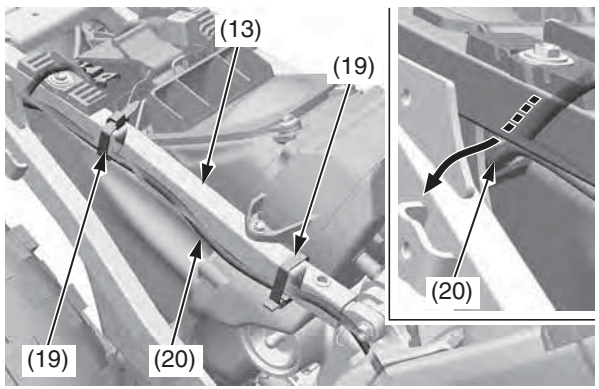


(13) subframe
(19) cable bands
(20) negative (-) battery cable

(cont'd)

11. Remove the positive (+) battery cable bands (21), then release the positive (+) battery cable (22) from the subframe (13).

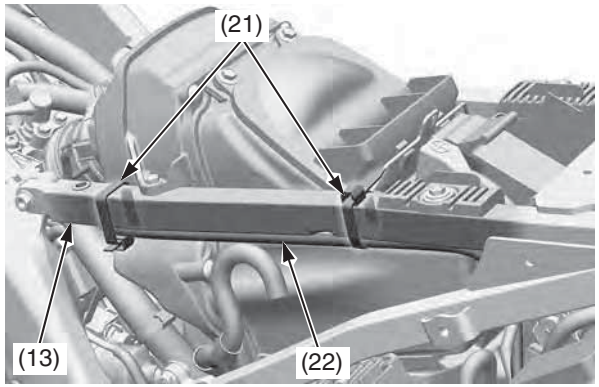


(13) sub frame
(21) cable bands
(22) positive (+) battery cable

12. Disconnect the taillight connectors (23). Remove the fuse box assembly mounting bolt/washer (24).
Remove the regulator/rectifier mounting bolts (25).

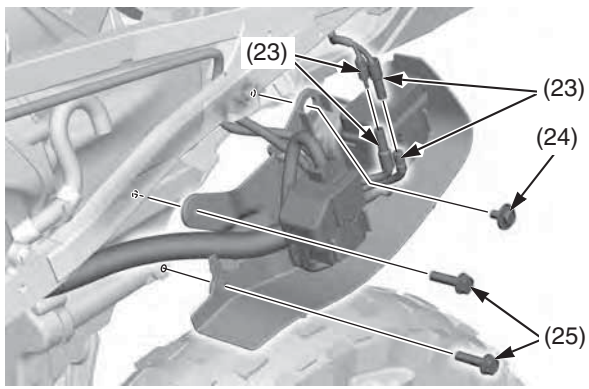


(23) taillight connectors
(24) fuse box assembly mounting bolt/washer
(25) regulator/rectifier mounting bolts

13. Remove the rear fender mounting bolt (26). Remove the rear fender (27) to the rearward being careful not to damage the taillight wire harness.

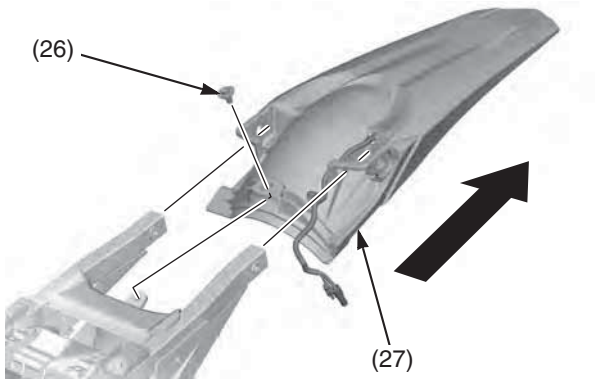


(26) rear fender mounting bolt
(27) rear fender

14. Remove the flange nut (28) and release the wire harness guide (29) from the subframe. Release the canister air tube (30) from the air cleaner housing boss (31).

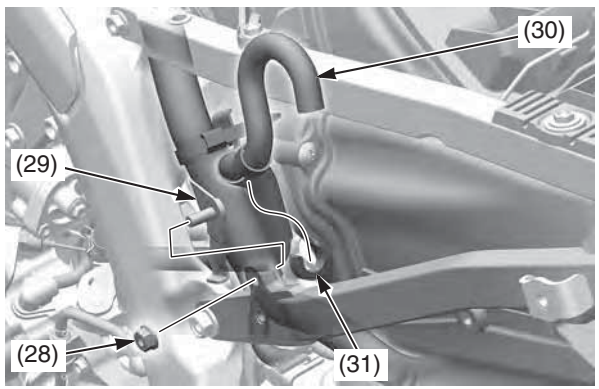


(28) flange nut
(29) harness guide
(30) canister air tube
(31) boss

15. Remove the air cleaner housing mounting bolts A (32), air cleaner housing mounting bolts B (33) and collars (34).

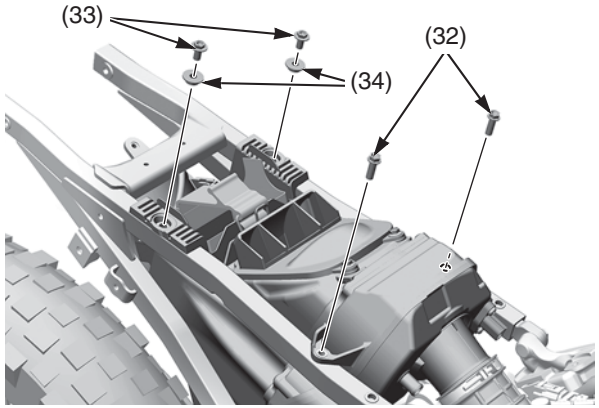


(32) air cleaner housing mounting bolts A
(33) air cleaner housing mounting bolts B
(34) collars

16. Remove the subframe upper mounting bolts (35) and lower mounting bolts (36).
Remove the subframe (13) to the rearward being careful not to damage the wire harness.

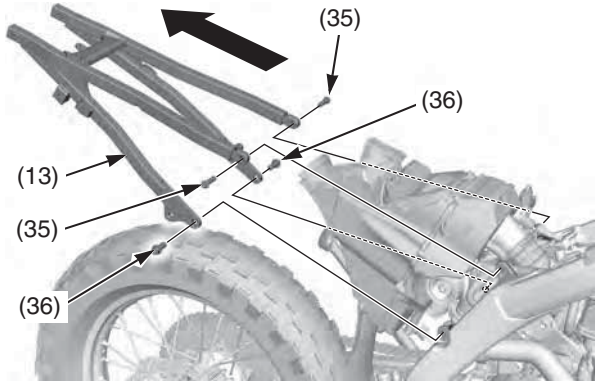


(13) sub frame
(35) upper mounting bolts
(36) lower mounting bolts

17. Remove the air cleaner housing (17) from the connecting tube (37).

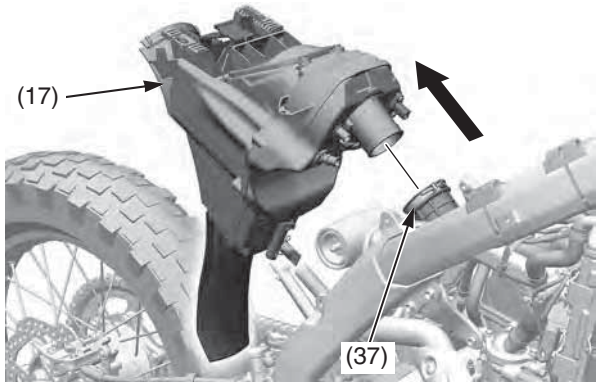


(17) air cleaner housing
(37) connecting tube

Installation

1. Install the air cleaner housing (1) to the connecting tube (2).

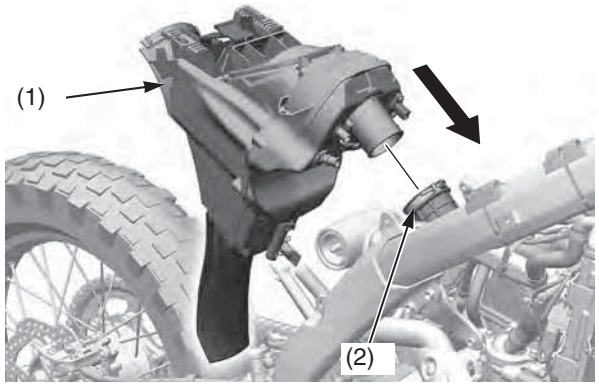


(1) air cleaner housing
(2) connecting tube

2. Loosely attach the upper and lower ends of the subframe (3) to the main frame (4), while installing the wire harness into place and loosely install subframe upper mounting bolts (5) and lower mounting bolts (6).

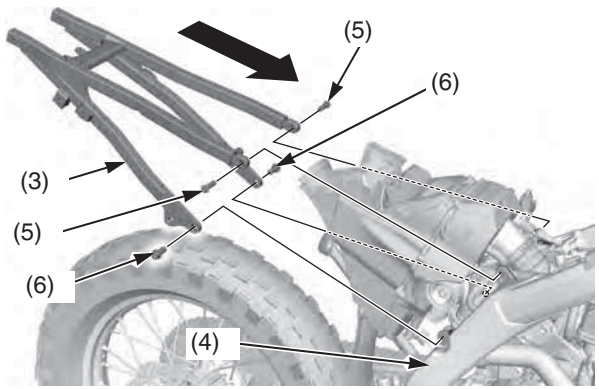


(3) subframe
(4) main frame
(5) upper mounting bolts
(6) lower mounting bolts

3. Tighten the subframe upper mounting bolts (5) first and then tighten the lower mounting bolts (6) to the specified torque.
   subframe upper mounting bolts:
   24 lbf·ft (32 N·m, 3.3 kgf·m)
   subframe lower mounting bolts:
   36 lbf·ft (49 N·m, 5.0 kgf·m)

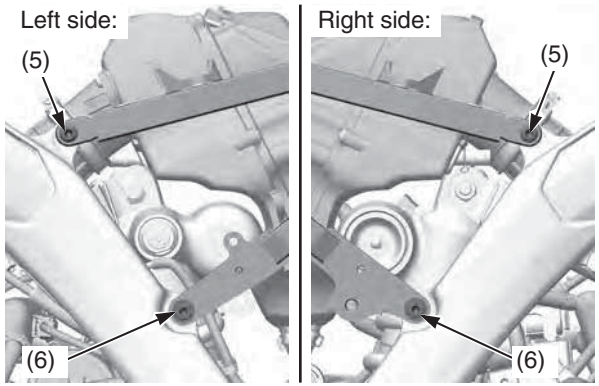


(5) upper mounting bolts
(6) lower mounting bolts

4. Install and tighten the air cleaner housing mounting bolts A (7), collars (8) and air cleaner housing mounting bolts B (9).

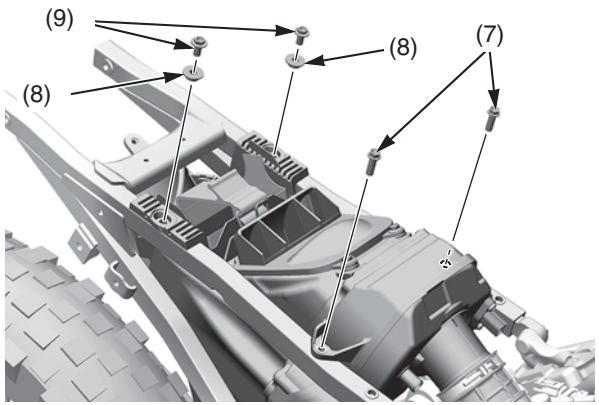


(7) air cleaner housing mounting bolts A
(8) collars
(9) air cleaner housing mounting bolts B

(cont'd)

5. Install the wire harness guide (10) to the subframe, then install and tighten the flange nut (11). Route the canister air tube (12) properly, then install it to the air cleaner housing boss (13).

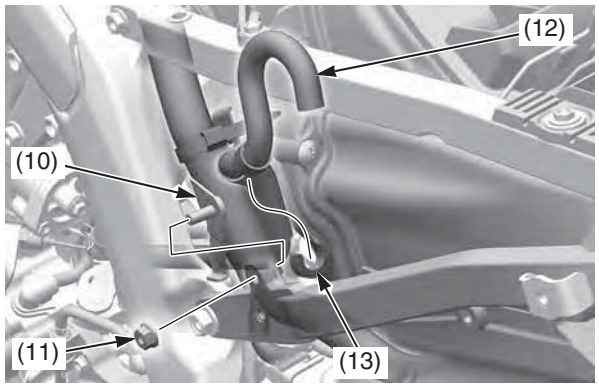


(10) harness guide
(11) flange nut
(12) canister air tube
(13) boss

6. Install the rear fender (14), then tighten the rear fender mounting bolt (15) to the specified torque.
   7 lbf·ft (10 N·m, 1.0 kgf·m)

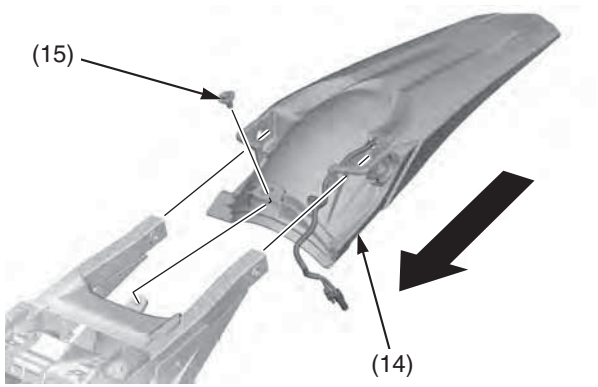


(14) rear fender
(15) rear fender mounting bolt

7. Connect the taillight connectors (16). Install the fuse box assembly (17) to the air cleaner housing (1). Install the fuse box assembly mounting bolt/washer (18). Install the regulator/rectifier mounting bolts (19). Tighten the regulator/rectifier mounting bolts and fuse box assembly mounting bolt/washer securely.

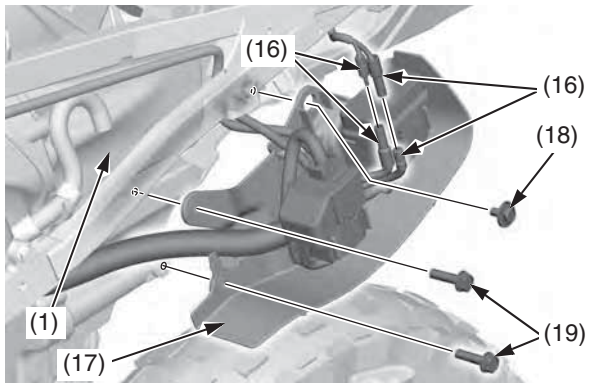


(1) air cleaner housing
(16) taillight connectors
(17) fuse box assembly
(18) fuse box assembly mounting bolt/washer
(19) regulator/rectifier mounting bolts

8. Route the positive (+) battery cable (20) properly, secure it with the positive (+) battery cable bands (21).

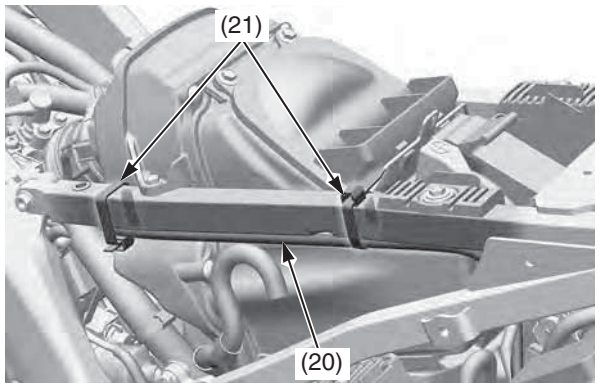


(20) positive (+) battery cable
(21) cable bands

9. Route the negative (-) battery cable (22) properly, secure it with negative (-) battery cable bands (23).

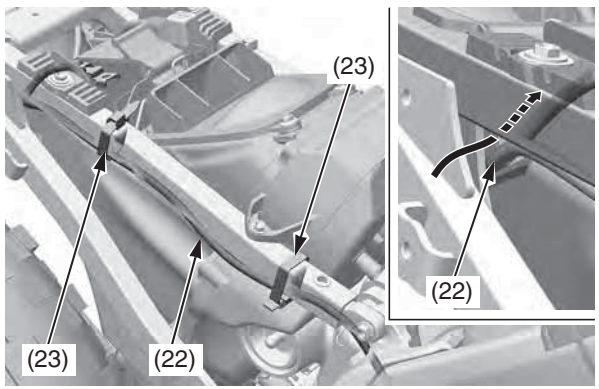


(22) negative (-) battery cable
(23) cable bands

10. Connect the crankcase breather tube (24) and air injection air tube (25) to the air cleaner housing (1). Connect the IAT sensor connector (26).
    Tighten the air cleaner connecting tube band screw (27) so the clamp ends is 0.30 ±0.06 in(7.5 ± 1.5 mm).

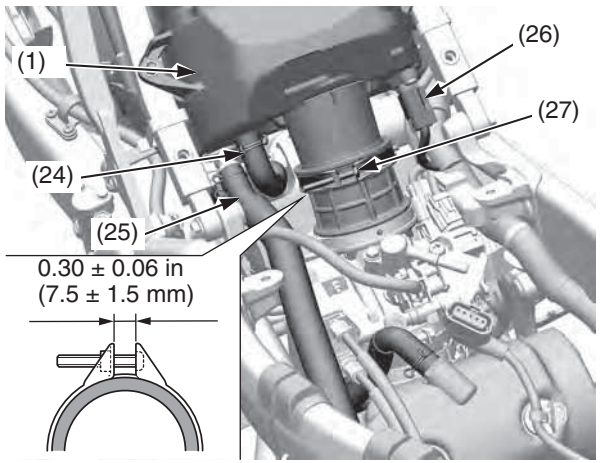


(1) air cleaner housing
(24) crankcase breather tube
(25) air injection air tube
(26) IAT sensor connector
(27) connecting tube band screw

11. Install the seat support base (28) to the subframe. Install the collars (29) and mounting bolts (30), then tighten the mounting bolts to the specified torque:
    7 lbf·ft (10 N·m, 1.0 kgf·m)

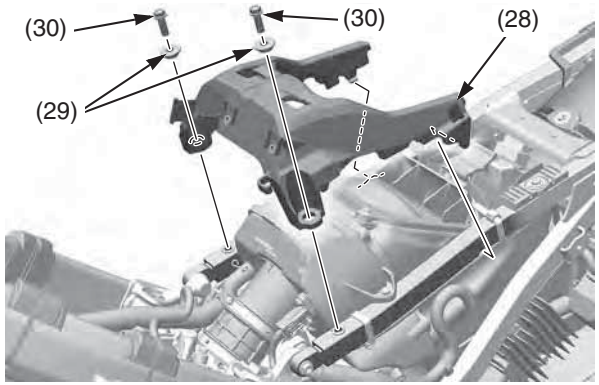


(28) seat support base
(29) collars
(30) bolts

12. Install the bank angle sensor assembly (31) to the seat support base (28) using the washers (32), collars B (33), collars A (34), ECM stay (35) and stay mounting bolts (36), then tighten the bolts securely.

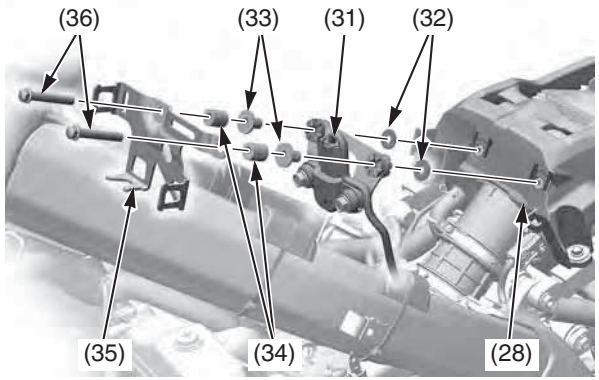


(28) seat support base
(31) bank angle sensor assembly
(32) washers
(33) collars B
(34) collars A
(35) ECM stay
(36) bolts

13. Install the starter relay (37) to the seat support base (28). Install the ECM (38) to the ECM stay (35).

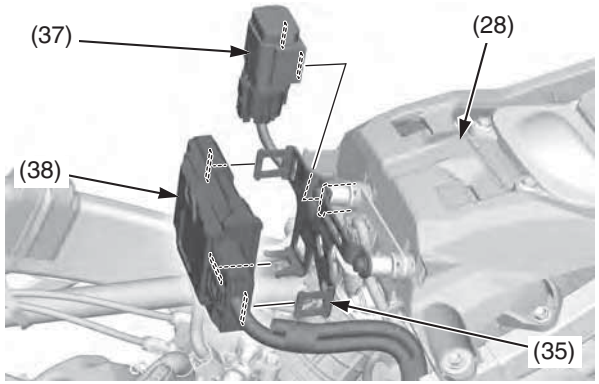


(28) seat support base
(35) ECM stay
(37) starter relay
(38) ECM

14. Install the left side cover (page 44).
15. Install the muffler (page 127).
16. Install the fuel tank (page 45).
17. Install the battery (page 133).

Refer to *Important Safety Precautions* on page 31.

## Fuel

| | |
|---|---|
| Type | Unleaded |
| Pump Octane Number | 91 (or higher) |

Use only unleaded fuel in your CRF. If you ride your CRF in a country where leaded fuel might be available, take precautions to use only unleaded fuel.

Your engine is designed to use any unleaded gasoline that has a pump octane number of 91 or higher. Gasoline pumps at service stations normally display the pump octane number.
For information on the use of oxygenated fuels, see page 175.

Use of lower octane gasoline can cause persistent "pinging" or "spark knock" (a louder rapping noise) which, if severe, can lead to engine damage. (Light pinging experienced while operating under a heavy load, such as climbing a hill, is no cause for concern.)

If pinging or spark knock occurs at a steady engine speed under normal load, change brands of gasoline. If pinging or spark knock persists, consult your dealer.

Never use stale or contaminated gasoline. Avoid getting dirt, dust or water in the fuel tank.

## Refueling Procedure

If mud is on the fuel fill cap (1) and fuel tank top shelter (2) at time of refueling, remove the mud before refueling.

1. To open the fuel fill cap, turn the fuel fill cap counterclockwise and remove it.

**NOTICE**

*Equivalent or modified parts must comply with applicable Air Resource Board (ARB) evaporative emission control regulations. Non-compliance may result in civil litigation or criminal prosecution.*

*The fuel cap may not be disassembled. When replacing, consult with a dealer and replace with a Honda genuine fuel cap or one that complies with Air Resource Board (ARB) evaporative emission control regulations.*

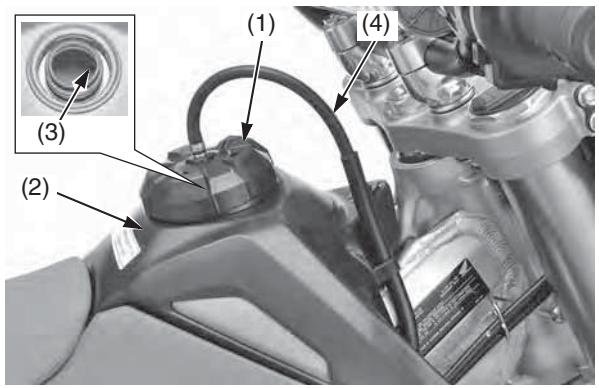


(1) fuel fill cap
(2) top shelter
(3) filler neck bottom
(4) breather tube

2. Add fuel until the level reaches the bottom of the filler neck (3).
   Fuel Tank Capacity: 2.01 US gal (7.6 ℓ)

- Be careful not to damage the fuel pump while filling the fuel tank.
- Avoid overfilling the tank. There should be no fuel in the filler neck.

**⚠ WARNING**

Gasoline is highly flammable and explosive. You can be burned or seriously injured when handling fuel.

- Stop the engine and keep heat, sparks and flame away.
- Handle fuel only outdoors.
- Wipe up spills immediately.

3. After refueling, turn the fuel fill cap clockwise until it clicks.
   - If the breather tube (4) is twisted, turn the rotary joint to correct.
   - If you replace the fuel cap, use a Honda Genuine replacement part or equivalent.

## Fuel Line Inspection

1. Hang the fuel tank to the left side of the frame (page 45).
2. Remove the fuel quick connect fitting cover (1).
3. Check the fuel line (2) for cracks, deterioration, damage or leakage. Replace the fuel line, if necessary.

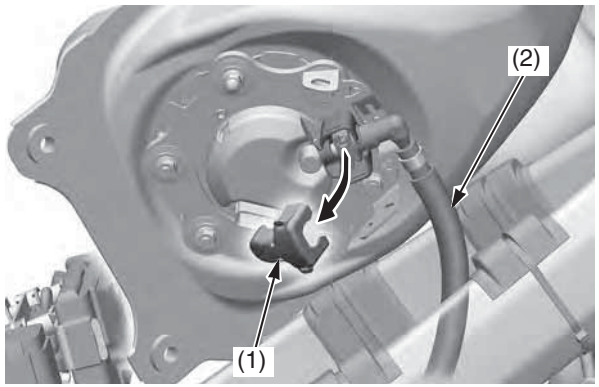


(1) fuel quick connect fitting cover
(2) fuel line

4. Install the fuel quick connect fitting cover.
5. Install the fuel tank (page 47).

## Fuel Line Replacement

Disconnection

1. Remove the fuel tank (page 45).
2. Check the fuel quick connect fitting (1) for dirt, and clean if necessary.
3. Remove the bolt (2), clamp and setting rubber (3).

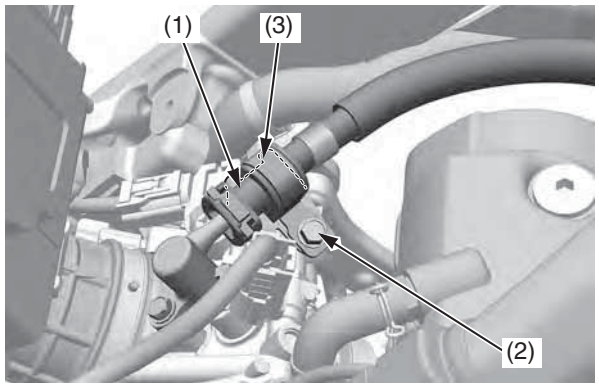


(1) fuel quick connect fitting
(2) bolt
(3) clamp and setting rubber

4. Place a shop towel (4) over the fuel quick connect fitting.

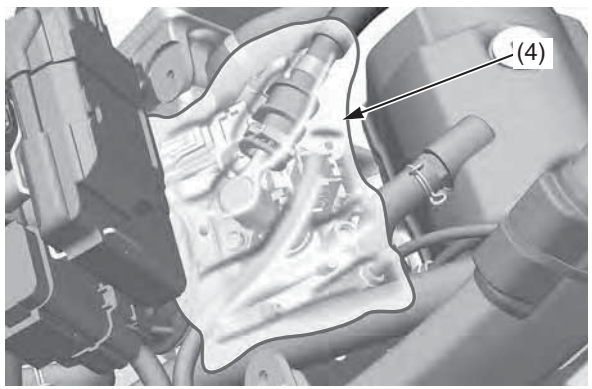


(4) shop towel

5. Unlock the slide retainer (5) of the quick connect fitting by completely pulling it up. Release the fuel quick connect fitting from the fuel joint (6) while holding the connector housing (7).
   - Use a shop towel to absorb the remaining fuel in the fuel feed hose.
   - Be careful not to damage the hose or other parts.
   - Do not use tools.
   - Dirt intruding into the connector housing may cause slide retainer sticking.

**⚠ WARNING**

Gasoline is highly flammable and explosive. You can be burned or seriously injured when handling fuel.

- Stop the engine and keep heat, sparks and flame away.
- Handle fuel only outdoors.
- Wipe up spills immediately.

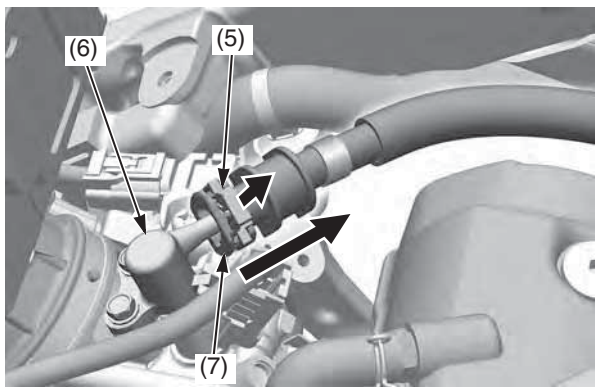


(5) slide retainer
(6) fuel joint
(7) connector housing

(cont'd)

6. Remove the rubber cover (8) from the fuel joint of the fuel pump.

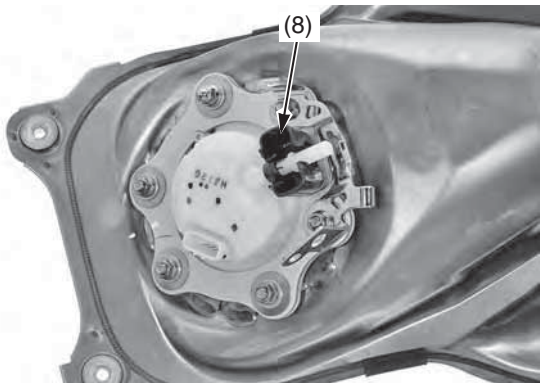


(8) rubber cover

7. To prevent damage and keep foreign matter out, cover the disconnected connector (9) and fuel joint (6) with plastic bags (10).

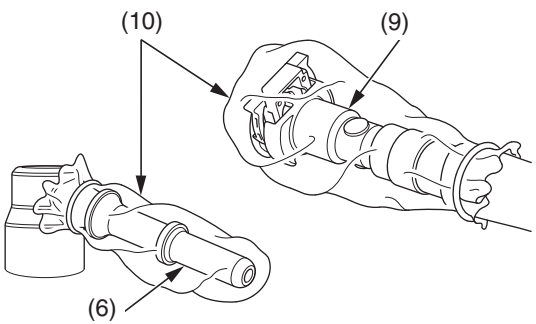


(6) fuel joint
(9) disconnected connector
(10) plastic bags

Connection

1. Install the rubber cover (1) onto the fuel joint (2) of the fuel pump as shown.

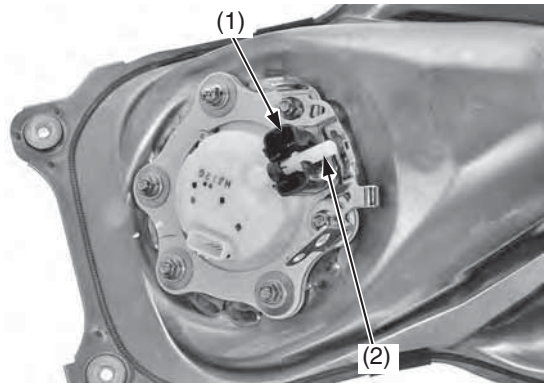


(1) rubber cover
(2) fuel joint

2. Be sure that the slide retainer (3) is completely pulled up before connecting the quick connect fitting.
   - Do not bend or twist the fuel feed hose.
   - Do not reuse the kinked or damaged fuel hose.
   - Do not use gloves or a shop towel while installing the quick connect fitting.

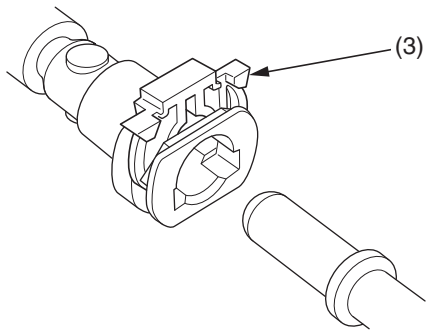


(3) slide retainer

3. Connect the quick connect fitting to the fuel joint (2) until you hear the “click” while holding the connector housing (4). Lock the slide retainer (3) by pushing it until you hear the “click”.

If it is hard to connect, put a small amount of engine oil on the pipe end of the fuel joint.

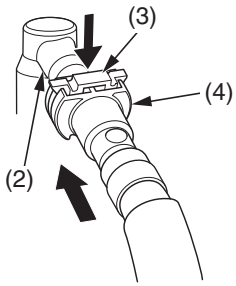


(2) fuel joint
(3) slide retainer
(4) connector housing

4. Make sure the connection is secure and that the slide retainer is firmly locked into place; check visually and by pulling the connector housing.

5. Install the setting rubber (5), clamp (6) and bolt (7) by aligning the clamp tab (8) with the groove (9) of the stay.
   Tighten the bolt securely.

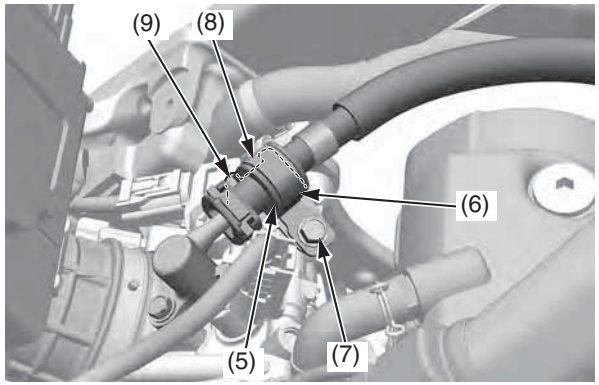


(5) setting rubber
(6) clamp
(7) bolt
(8) clamp tab
(9) groove

6. Install the fuel tank (page 47).
7. Increase the fuel pressure (page 62).

## Fuel Pump Filter Replacement

Empty the fuel tank into an approved gasoline container using a commercially available hand siphon or an equivalent method.
Be careful not to damage the fuel pump while draining the fuel in the fuel tank.

**⚠ WARNING**

Gasoline is highly flammable and explosive. You can be burned or seriously injured when handling fuel.

- Stop the engine and keep heat, sparks and flame away.
- Handle fuel only outdoors.
- Wipe up spills immediately.

Removal

1. Remove the fuel tank (page 45).
2. Remove the fuel pump mounting nuts (1), fuel pump mounting cap nut (2), stopper cable guide (3), washer (4), collars (5), conical spring washers (6) and fuel pump plate (7) while holding the fuel tank.

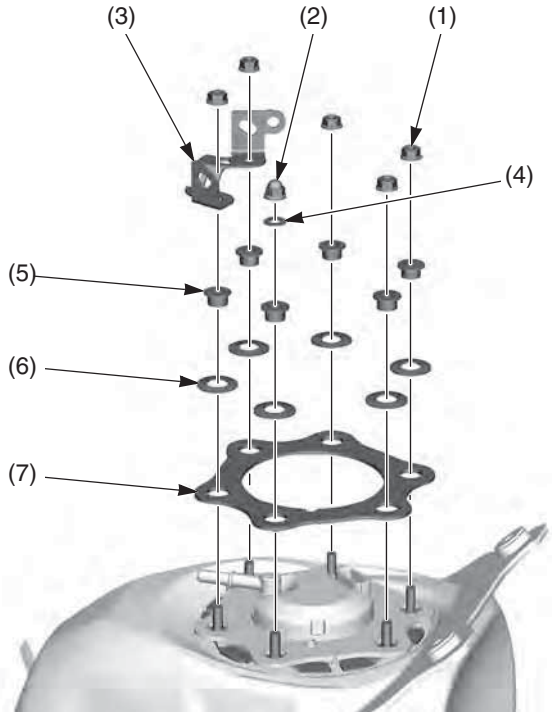


(1) fuel pump mounting nuts
(2) fuel pump mounting cap nut
(3) stopper cable guide
(4) washer
(5) collars
(6) conical spring washers
(7) fuel pump plate

(cont'd)

3. Remove the fuel pump unit (8), dust seal (9) and O-ring (10).

Be careful not to damage the fuel pump unit and reserve sensor.

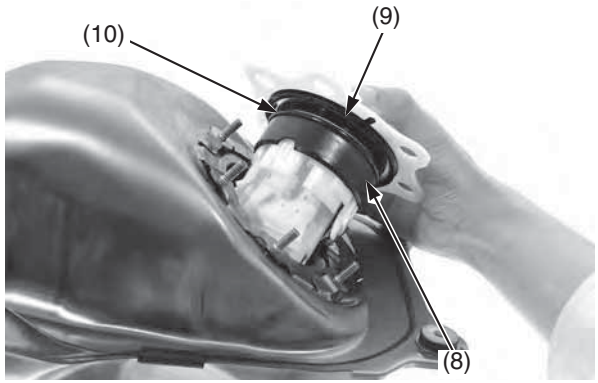


(8) fuel pump unit
(9) dust seal
(10) O-ring

4. Disconnect the fuel pump wire terminals (11) and fuel reserve sensor wire terminals (12) from the fuel pump base (13).

Be careful not to damage the wires when disconnecting the fuel reserve sensor wire terminals and fuel pump wire terminals.

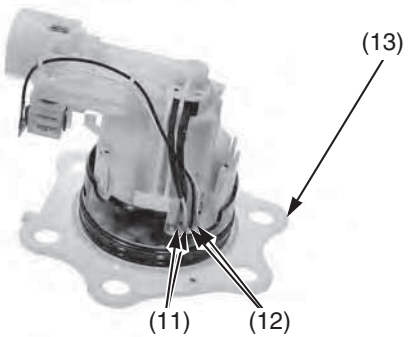


(11) fuel pump wire terminals
(12) fuel reserve sensor wire terminals
(13) fuel pump base

5. Check the hooks (14) of the fuel pump unit holder and tabs (15) on the fuel pump base for damage or discoloration.
   If the hooks and tabs are damaged or discolored, replace the fuel pump unit as an assembly.
6. Release the hooks of the fuel pump unit holder from the grooves (16) in the fuel pump base tabs while pushing the holder against the base and slightly spreading the base tabs.

Be careful not to damage the hooks and tabs.

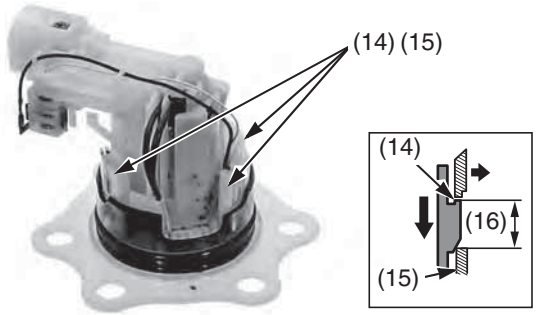


(14) hooks
(15) tabs
(16) grooves

7. Remove the fuel pump unit holder assembly (17) from the fuel pump base (13) and remove the O-ring (18).

Wipe the spilled out fuel immediately.

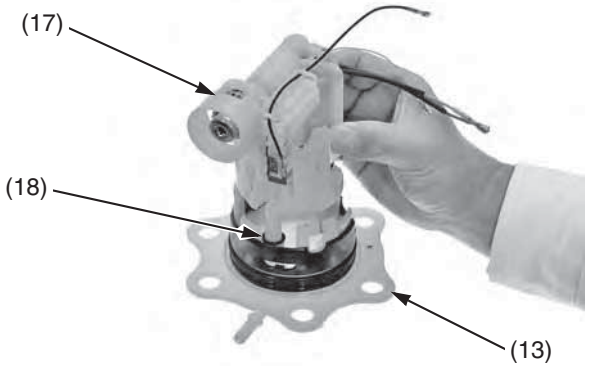


(13) fuel pump base
(17) fuel pump unit holder assembly
(18) O-ring

8. Remove the fuel pump stopper (19) and damper rubber (20).

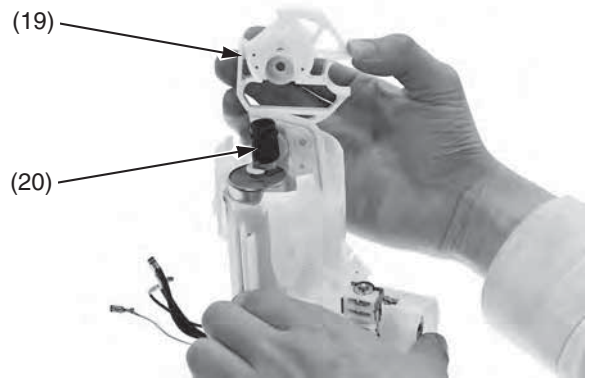


(19) fuel pump stopper
(20) damper rubber

9. Remove the fuel pump assembly (21) from the fuel pump unit holder (22).
10. Remove the O-ring (23) from the fuel pump assembly (21).

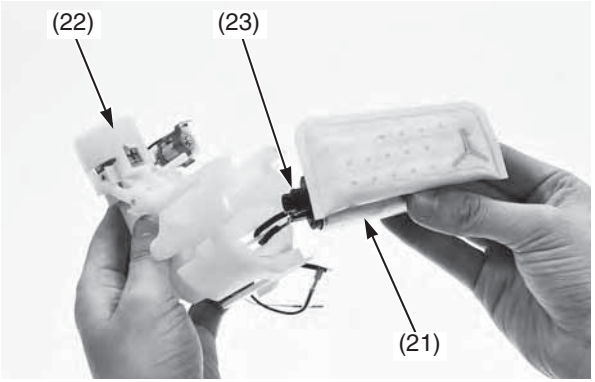


(21) fuel pump assembly
(22) fuel pump unit holder
(23) O-ring

11. Remove the fuel pump filter (24) from the fuel pump assembly (21).
12. Check the fuel pump filter for clog, damage or deterioration and replace it if necessary.

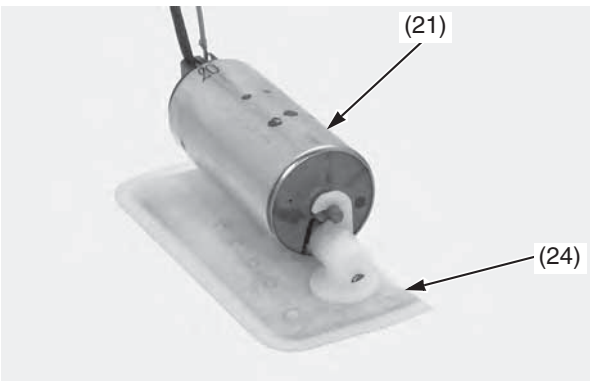


(21) fuel pump assembly
(24) fuel pump filter

Installation

1. Install the fuel pump filter (1) onto the fuel pump assembly (2) aligning its hook (3) with the joint boss (4) completely.

Be careful not to damage the hook.

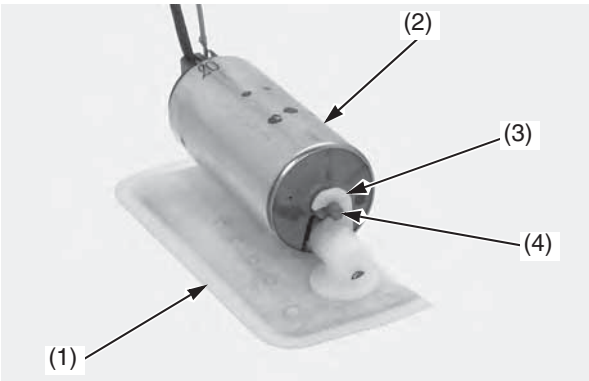


(1) fuel pump filter
(2) fuel pump assembly
(3) hook
(4) joint boss

2. Apply small amount of engine oil to a new O-ring (5).
   Install a new O-ring to the fuel pump assembly (2).
3. Install the fuel pump assembly with fuel pump filter into the fuel pump unit holder (6) while routing the fuel pump yellow (7) and green (8) wires through the holder grooves (9) as shown.

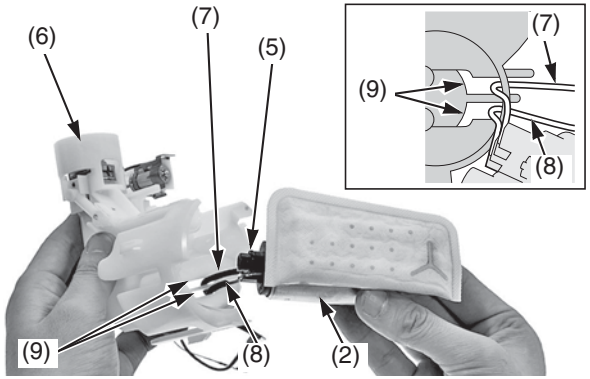


(2) fuel pump assembly
(5) O-ring (new)
(6) fuel pump unit holder
(7) yellow wire
(8) green wire
(9) grooves

4. Install a new damper rubber (10) to the fuel pump filter as shown.
   Install fuel pump stopper (11).

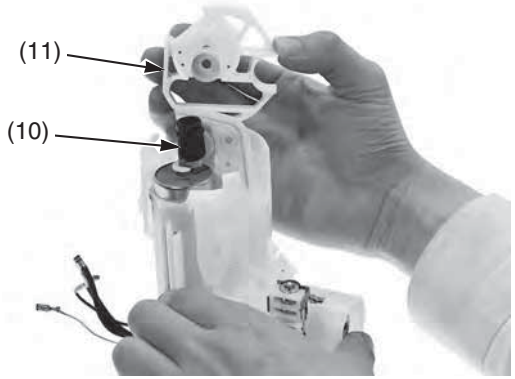


(10) damper rubber (new)
(11) fuel pump stopper

(cont'd)

5. Apply small amount of engine oil to a new O-ring (12).
   Install a new O-ring to the fuel pump base (13).
6. Install the fuel pump unit holder assembly (14) into the fuel pump base while aligning its hooks (15) with the grooves (16) in the fuel pump base tabs (17).
   If the gap between the hooks and tabs is more than 0.04 in (1.0 mm), replace the fuel pump unit.

Be sure that the hooks are completely seated.

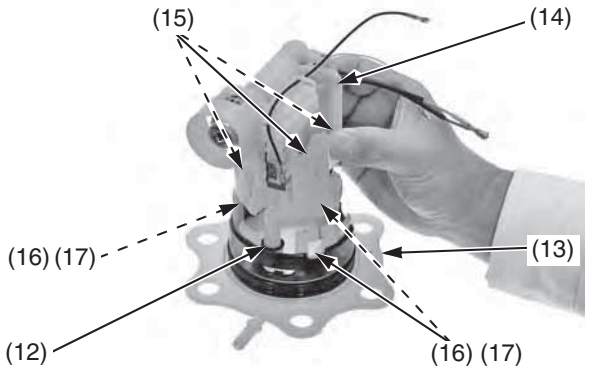


(12) O-ring (new)
(13) fuel pump base
(14) fuel pump unit holder assembly
(15) hooks
(16) grooves
(17) tabs

7. Connect the fuel pump yellow (18) and green (19) wire terminals to the fuel pump base terminals (20). Route the fuel reserve level sensor wires properly, connect the white (21) and black (22) wire terminals to the fuel pump base terminals. Push the wire terminals until they stop as shown.

Be careful not to damage the wires.

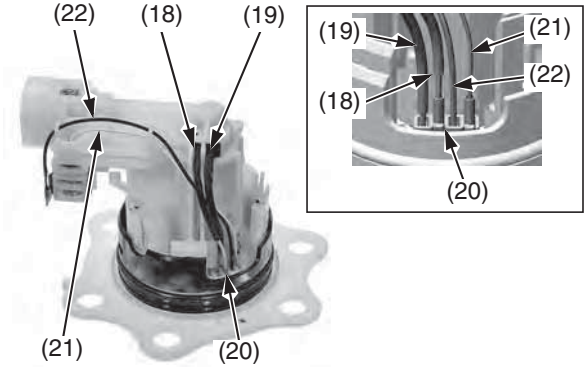


(18) yellow wire terminal
(19) green wire terminal
(20) fuel pump base terminals
(21) white wire terminal
(22) black wire terminal

8. Install a new dust seal (23) by aligning its tabs (24) with the fuel pump unit grooves (25).

Check the dust seal lug (26) which is located the index mark (27) of the fuel pump base (13).

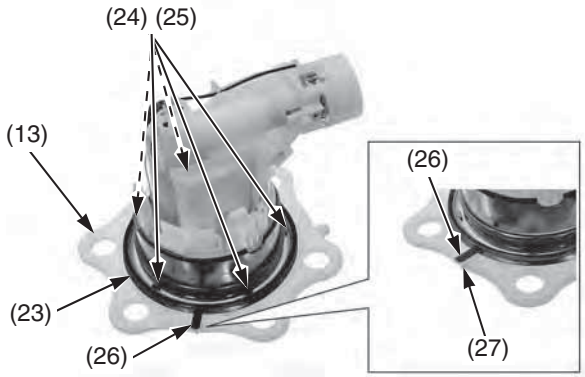


(13) fuel pump base
(23) dust seal (new)
(24) tabs
(25) grooves
(26) dust seal lug
(27) index mark

9. Apply small amount of engine oil to a new O-ring (28).
   Install a new O-ring into the between the dust seal (29) and collar (30) of the fuel pump unit (31).

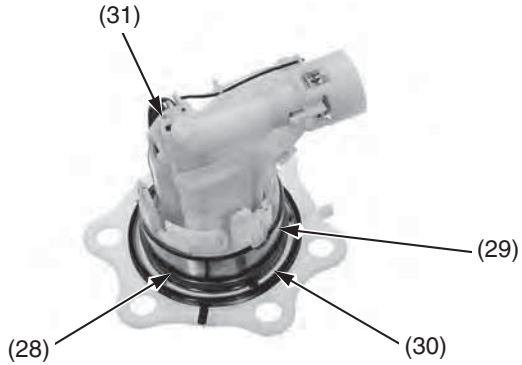


(28) O-ring (new)
(29) dust seal
(30) collar
(31) fuel pump unit

10. Install the fuel pump unit (31) into the fuel tank (32) with its hose joint facing forward.

Be careful not to damage the fuel pump unit and reserve sensor.

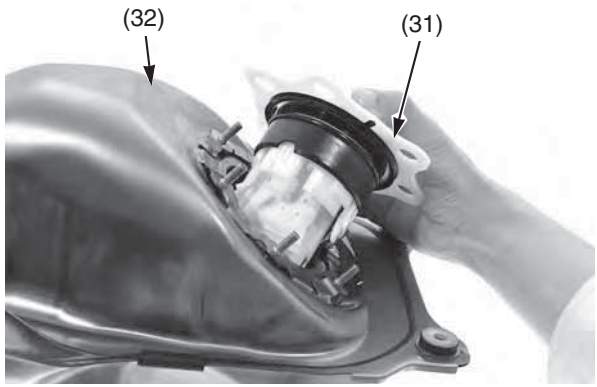


(31) fuel pump unit
(32) fuel tank

11. Install the fuel pump plate (33) by aligning with its groove (34) with fuel pump unit lug (35).

Check the dust seal lug (26) is in position as shown.

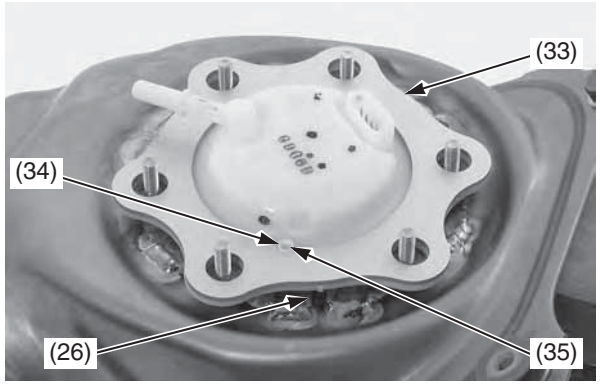


(26) dust seal lug
(33) fuel pump plate
(34) fuel pump plate groove
(35) fuel pump unit lug

12. Install the conical spring washers (36), collars (37), washer (38), stopper cable guide (39), fuel pump mounting nuts (40) and fuel pump mounting cap nut (41).

Make sure that the convex surfaces of the conical spring washers are upside.
Make sure that the cap nut is in position of the identification mark (42) on the fuel pump plate (33).

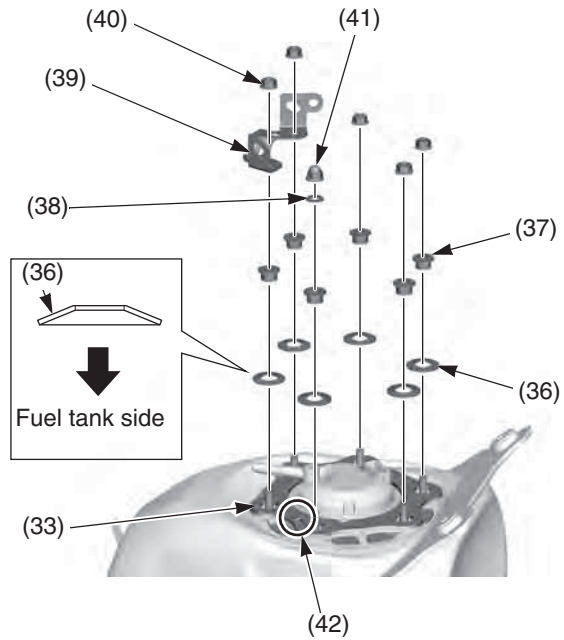


(33) fuel pump plate
(36) conical spring washers
(37) collars
(38) washer
(39) stopper cable guide
(40) fuel pump mounting nuts
(41) fuel pump mounting cap nut
(42) identification mark

13. Tighten the fuel pump mounting nuts (40) and cap nut (41) to the specified torque in the specified sequence as shown:
8 lbf·ft (11 N·m, 1.1 kgf·m)

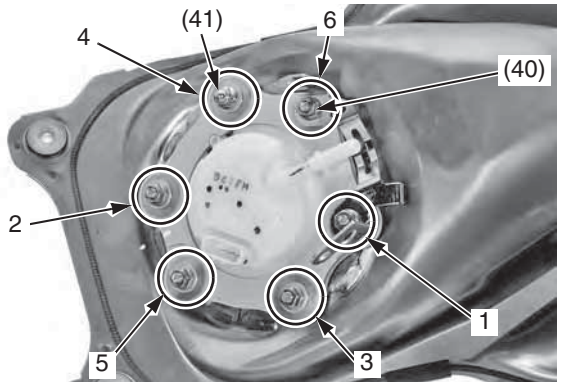


(40) fuel pump mounting nuts
(41) fuel pump mounting cap nut

14. Install the fuel tank (page 47).
15. Increase the fuel pressure (page 62).

## Fuel Pressure Increasing

Make sure the fuel remains enough (0.3 US gal (1.0 ℓ) minimum) in the fuel tank and add fuel if necessary before increasing fuel pressure.

With the throttle closed.
Pull the clutch lever all the way in, and depress the start button.

The engine will start up by increasing the fuel pressure.

If the engine does not start, check all connector connections and/or refer to an official Honda Service Manual (page 182) for troubleshooting of the PGM-FI symptom.

Refer to *Important Safety Precautions* on page 31.

Using the proper oil and oil filter, and regularly checking, adding, and changing oil will help extend the service life of the engine. Even the best oil wears out. Changing oil helps get rid of dirt and deposits. Operating the engine with old or dirty oil can damage your engine. Running the engine with insufficient oil can cause serious damage to the engine.

## Oil Recommendation

| | |
|---|---|
| API classification | SG or higher except oils labeled as energy conserving or resource conserving on the circular API service label |
| viscosity (weight) | SAE 10W-30 |
| JASO T 903 standard | MA |
| suggested oil* | Pro Honda GN4 4-stroke Oil (USA & Canada), or Honda 4-stroke oil, or an equivalent motorcycle oil |

* Suggested 4-stroke engine oils are equal performance to SJ oils that are not labeled as energy conserving or resource conserving on the circular API service label.

- Your CRF does not need oil additives. Use the recommended oil.
- Do not use API SH or higher 4-stroke engine oils displaying a circular API "energy conserving" or "resource conserving" service label on the container. They may affect lubrication.

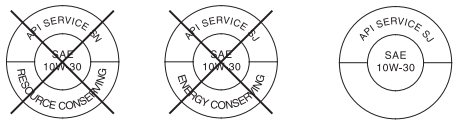


NOT RECOMMENDED RECOMMENDED

Other viscosities shown in the following chart may be used when the average temperature in your riding area is within the indicated range.

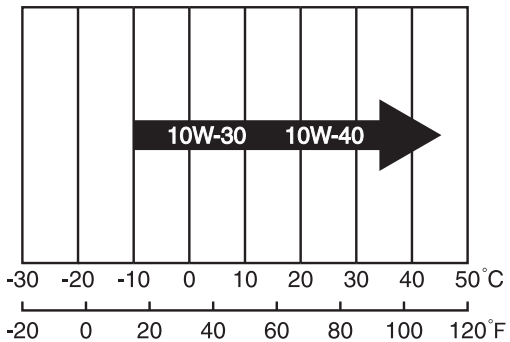


JASO T 903 standard

The JASO T 903 standard is an index for engine oils for 4-stroke motorcycle engines.
There are two classes: MA and MB.
Oil conforming to the standard is labeled on the oil container. For example, the following label shows the MA classification.

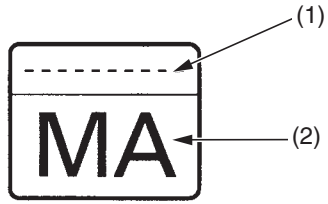


(1) oil code
(2) oil classification

## Checking & Adding Oil

1. Run the engine at idle for 3 minutes, then shut it off.
2. Wait 3 minutes after shutting off the engine to allow the oil to properly distribute itself in the engine.
3. Support the CRF in an upright position on a level surface.
4. Remove the engine oil fill cap/dipstick (1) from the left crankcase cover, wipe it clean, and insert it without screwing it in. Remove the oil fill cap/dipstick.
5. Check that the oil level is between the upper (2) and lower (3) level marks on the engine oil fill cap/dipstick.
   - If the oil is at or near the upper level mark, you do not have to add oil.
   - If the oil is below or near the lower level mark, add the recommended oil until it reaches the upper level mark. (Do not overfill.)
   Reinstall the engine oil fill cap/dipstick.
   Repeat steps 1 – 5.

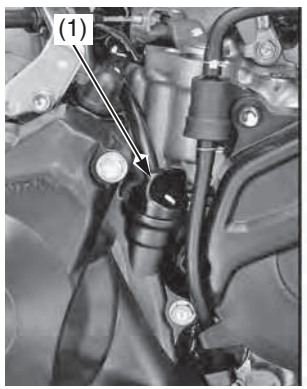

(1) engine oil fill cap/dipstick
(2) upper level mark
(3) lower level mark

6. Check that the O-ring (4) is in good condition and replace it if necessary.
7. Reinstall the engine oil fill cap/dipstick (1).

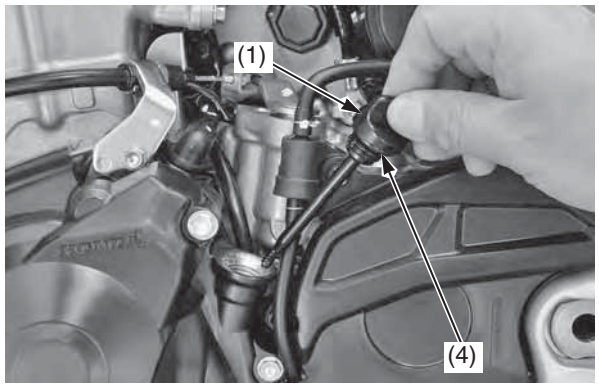


(1) engine oil fill cap/dipstick
(4) O-ring

8. Check for oil leaks.

## Changing Engine Oil & Filter

1. Remove the engine guard A bolts/washers (1), B bolt/washer (2) and engine guard (3).

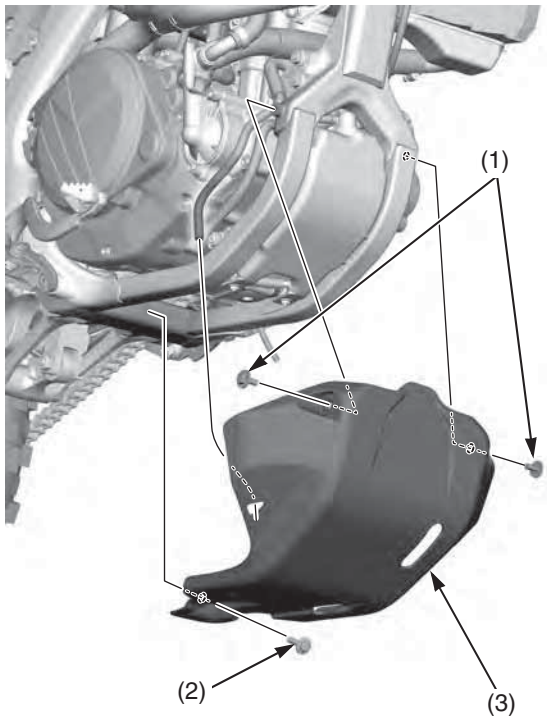


(1) engine guard A bolts/washers
(2) engine guard B bolt/washer
(3) engine guard

2. Run the engine at idle for 3 minutes, then shut it off.
3. Support the CRF in an upright position on a level surface.
4. Remove the engine oil fill cap/dipstick (4) from the left crankcase cover.

5. Place an oil drain pan under the engine to catch the oil. Then remove the engine oil drain bolt (5) and O-ring (6).
6. After the oil has drained, apply engine oil to the drain bolt threads, seating surface and a new O-ring, then install the O-ring on the drain bolt and tighten the drain bolt to the specified torque:
   13 lbf·ft (18 N·m, 1.8 kgf·m)

Pour the drained oil into a suitable container and dispose of it in an approved manner (page 160).

**NOTICE**

*Improper disposal of drained fluids is harmful to the environment.*

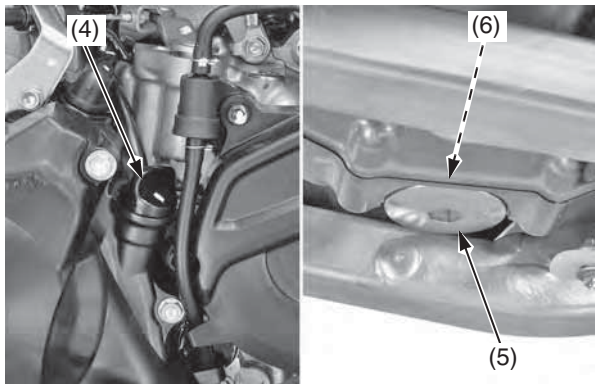


(4) engine oil fill cap/dipstick
(5) engine oil drain bolt
(6) O-ring (new)

7. (Competition Use)
   It is recommended to replace the oil and filter every 4 races or about every 15.0 hours. However, if you replace only the oil before the recommended interval, see page 34.
8. Remove the left crankcase over cover bolts (7) and over cover (8).

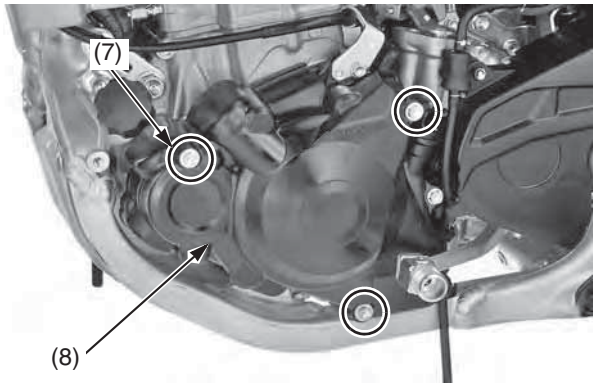


(7) bolts (8) over cover

9. Remove the oil filter cover bolts (9) and oil filter cover (10).
10. Remove the oil filter (11), O-ring (12) and spring (13).

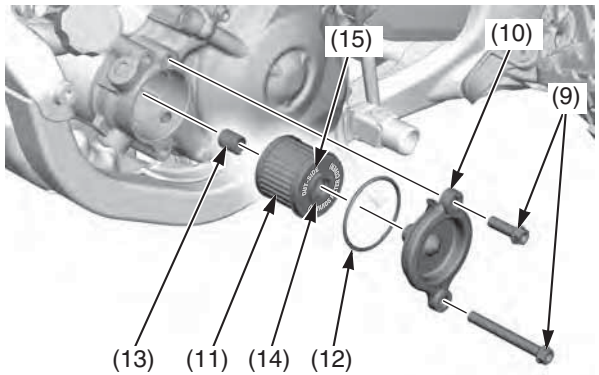


(9) oil filter cover bolts
(10) oil filter cover
(11) oil filter
(12) O-ring
(13) spring
(14) rubber seal
(15) “OUT-SIDE” mark

**NOTICE**

*Using the wrong oil filter may result in leaks or engine damage.*

11. Apply grease to the filter side of the spring end, then install the spring into a new oil filter.
12. Position the spring against the engine crankcase and install a new oil filter with the rubber seal (14) facing out, away from the engine. You should see the “OUT-SIDE” mark (15) on the filter body, near the seal.
    Use a new Honda Genuine oil filter or a filter of equal quality specified for your model.

**NOTICE**

*If the oil filter is not installed properly, it will cause serious engine damage.*

13. Apply engine oil to a new O-ring and install it to the oil filter cover.
14. Install the oil filter cover being careful not to damage the O-ring, then tighten the oil filter cover bolts to the specified torque:
    7 lbf·ft (10 N·m, 1.0 kgf·m)
15. Install the left crankcase over cover, then tighten the over cover bolts to the specified torque:
    9 lbf·ft (12 N·m, 1.2 kgf·m)
16. Install the engine guard, then tighten the engine guard A bolts/washers and B bolt/washer to the specified torque:
    7 lbf·ft (10 N·m, 1.0 kgf·m)
17. Fill the crankcase with the recommended oil.
    Capacity: 1.22 US qt (1.15 ℓ) after draining and filter change
    1.16 US qt (1.10 ℓ) after draining
18. Install the engine oil fill cap/dipstick.
19. Check the engine oil level by following the steps in *Checking & Adding Oil* (page 64).

Pour the drained oil into a suitable container and dispose of it in an approved manner (page 160).

**NOTICE**

*Improper disposal of drained fluids is harmful to the environment.*

# Coolant

Refer to *Important Safety Precautions* on page 31.

Your CRF's liquid cooling system dissipates engine heat through the coolant jacket that surrounds the cylinder and cylinder head.

Maintaining the coolant will allow the cooling system to work properly and prevent freezing, overheating, and corrosion.

## Coolant Recommendation

Use Pro Honda HP Coolant or an equivalent high quality ethylene glycol antifreeze containing corrosion protection inhibitors specifically recommended for use in aluminum engines. Check the antifreeze container label.

Use only distilled water as a part of the coolant solution. Water that is high in mineral content or salt may be harmful to the aluminum engine.

**NOTICE**

*Using coolant with silicate inhibitors may cause premature wear of the mechanical seal or blockage of the radiator passages. Using tap water may cause engine damage.*

The factory provides a 50/50 solution of antifreeze and water in this motorcycle. This coolant solution is recommended for most operating temperatures and provides good corrosion protection.

Decreasing the concentration of antifreeze to less than 40% will not provide proper corrosion protection.

Increasing the concentration of antifreeze is not recommended because it decreases cooling system performance. Higher concentrations of antifreeze (up to 60%) should only be used to provide additional protection against freezing.
Check the cooling system frequently during freezing weather.

## Checking & Adding Coolant

Refer to *Important Safety Precautions* on page 31.

1. With the engine at normal operating temperature, check the coolant level in the reserve tank (1) from the inspection window (2). It should be between the UPPER level (3) and LOWER level (4) marks.
   If the reserve tank is empty, or if coolant loss is excessive, check for leaks and see your dealer for repair.

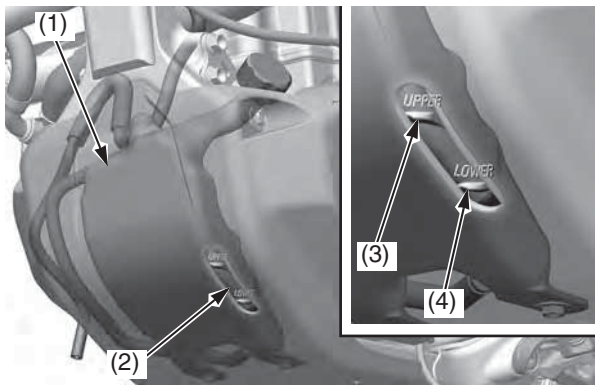


(1) reserve tank
(2) inspection window
(3) UPPER level
(4) LOWER level

2. Remove the reserve tank cap (5). Always add coolant to the reserve tank. Do not attempt to add coolant by removing the radiator cap.

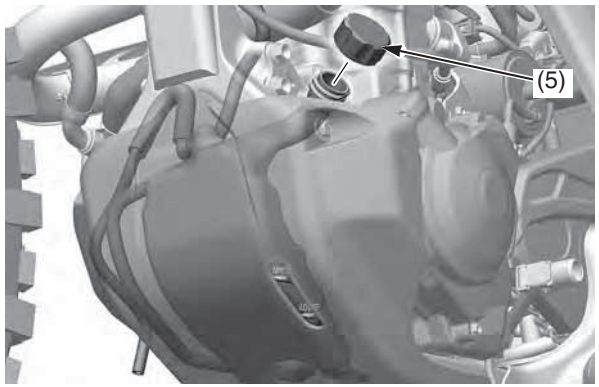


(5) reserve tank cap

3. Add coolant to the reserve tank as require to bring the coolant level to the UPPER level mark.
4. Install the reserve tank cap.

## Cooling System Inspection

1. Check the cooling system for leaks (see an official Honda Service Manual for troubleshooting of leaks).
2. Check the radiator hoses (1) for cracks, deterioration, and radiator hose clamps for looseness.
3. Check the radiator mount for looseness.
4. Make sure the siphon hose (2) is connected and not clogged.
5. Check the radiator fins (3) for clogging.

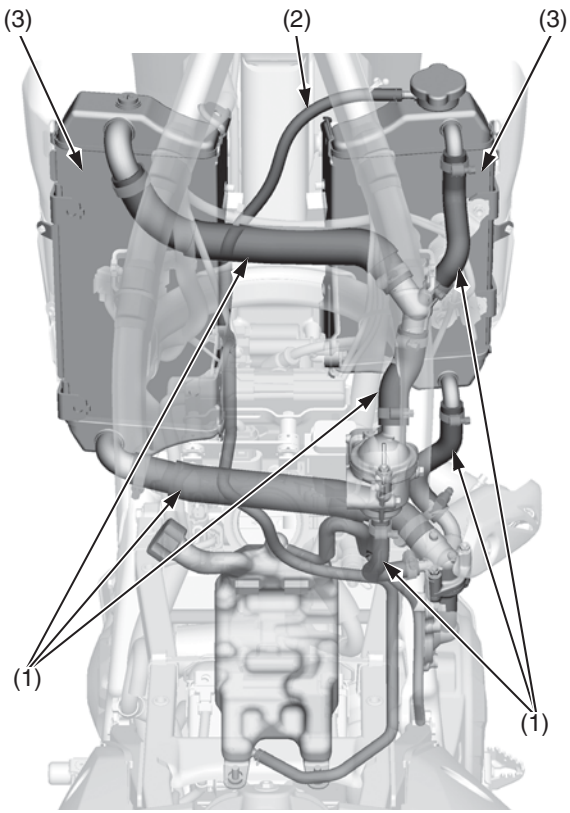


(1) radiator hoses
(2) siphon hose
(3) radiator fins

6. Check the bleed hole (4) below the water pump cover (5) for leakage. Clean away any clogged dirt or sand, if necessary. Check the bleed hole of the water pump for signs of seal leakage. If water leaks through the bleed hole, replace the mechanical seal. If oil leaks through the bleed hole, replace the oil seal. Make sure that there is no continuous coolant leakage from the bleed hole while operating the engine.
   A small amount of coolant weeping from the bleed hole is normal. See an official Honda Service Manual or consult your dealer for replacing the mechanical seal or oil seal.
   Both seals should be replaced at the same time.

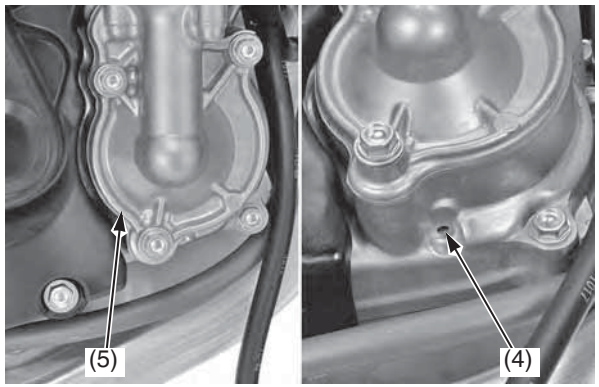


(4) bleed hole
(5) water pump cover

7. Check the radiator air passages for clogging or damage.
   Straighten bent fins (6), and remove insects, mud or other obstructions with compressed air or low water pressure.
   Replace the radiator if the air flow is restricted over more than 20% of the radiating surface.

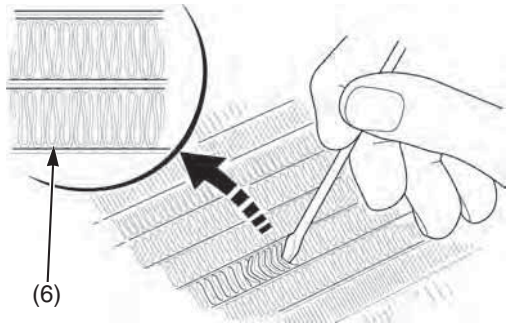


(6) fins

Radiator should be replaced by your dealer, unless you have the proper tools and service data and are mechanically qualified. Refer to an official Honda Service Manual (page 182).

## Coolant Replacement

Refer to *Important Safety Precautions* on page 31.

Coolant should be replaced by your dealer, unless you have the proper tools and service data and are mechanically qualified. Refer to an official Honda Service Manual (page 182).

**⚠ WARNING**

Removing the radiator cap while the engine is hot can cause the coolant to spray out, seriously scalding you.

Always let the engine and radiator cool down before removing the radiator cap.

To properly dispose of drained coolant, refer to *You & the Environment* on page 160.

**NOTICE**

*Improper disposal of drained fluids is harmful to the environment.*

## Cooling System Bleed Air

1. Remove the radiator cap (1).
2. Fill the system with the recommended coolant through the filler opening up to filler neck (2). Use a fresh recommended coolant mixture (page 66).

   Capacity: 1.31 US qt (1.24 ℓ) after disassembly
   1.20 US qt (1.14 ℓ) after draining

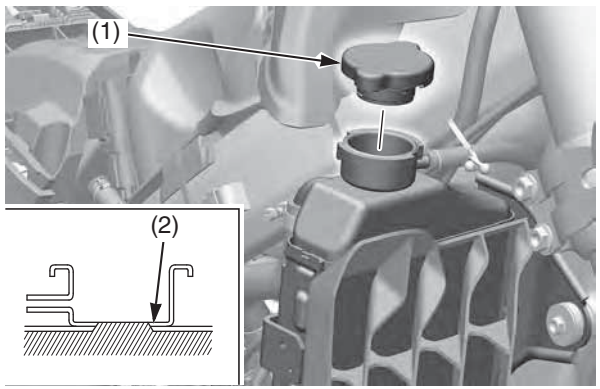


(1) radiator cap (2) filler neck

3. Remove the reserve tank cap (3) and fill the reserve tank up to the UPPER level line (4).

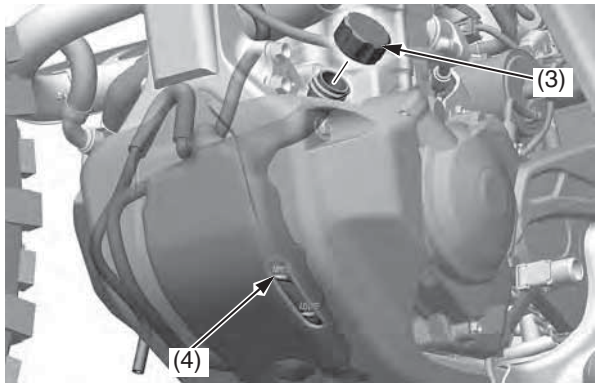


(3) reserve tank cap (4) UPPER level line

4. Bleed air from the system as follows:
   - Shift the transmission into neutral. Start the engine and let it idle 2 -3 minutes.
   - Snap the throttle three - four times to bleed air from the system.
   - Stop the engine and, if necessary, add coolant up to the proper level. Reinstall the radiator cap.
   - Check the level of coolant in the reserve tank and fill to the UPPER level if it is low.

**NOTICE**

*If the radiator cap is not installed properly, it will cause excessive coolant loss and may result in overheating and engine damage.*

5. Install the reserve tank cap.

Refer to *Important Safety Precautions* on page 31.

The air cleaner uses polyurethane inner and outer pieces which can't be separated.
A dirty air cleaner will reduce engine power.

Proper air cleaner maintenance is very important for all motorcycle. A dirty, water-soaked, worn-out, or defective air cleaner will allow dirt, dust, mud, and other impurities to pass into the engine.

Service the air cleaner more frequently if you ride in unusually wet or dusty areas. Your dealer can help you determine the correct service interval for your riding conditions.

Your CRF's air cleaner has very specific performance requirements. Use a new Honda Genuine air cleaner specified for your model or an air cleaner of equal quality.

**NOTICE**

*Using the wrong air cleaner may result in premature engine wear.*

Proper air cleaner maintenance can prevent premature engine wear or damage, expensive repairs, low engine power, poor gas mileage, and spark plug fouling.

**NOTICE**

*Improper or lack of proper air cleaner maintenance can cause poor performance and premature engine wear.*

## Cleaning

1. Remove the seat (page 43).
2. Remove the air cleaner lid bolts(1). Unhook the retainer (2) and remove the air cleaner lid (3).

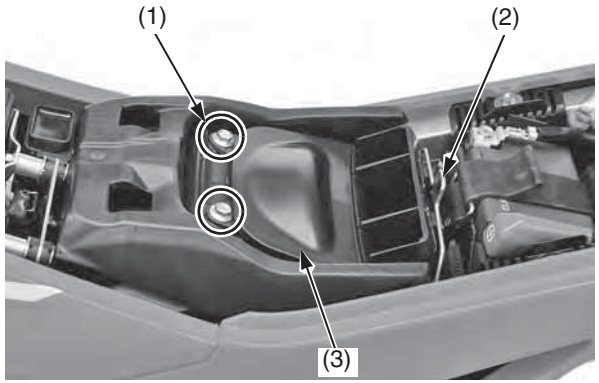


(1) bolts
(2) retainer
(3) air cleaner lid

3. Remove the air cleaner retaining bolt (4) and air cleaner assembly (5).

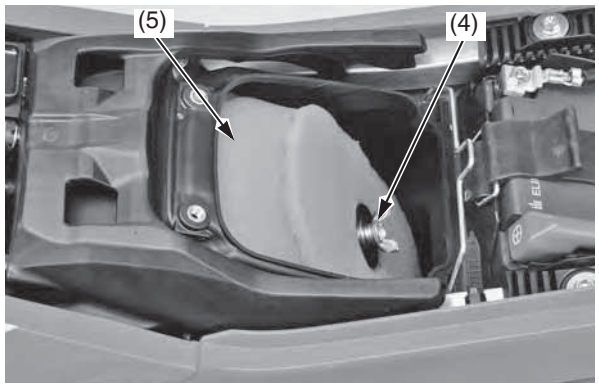


(4) air cleaner retaining bolt
(5) air cleaner assembly

4. Remove the air cleaner element (6) from the air cleaner holder (7) by releasing the hole (8) of the air cleaner element from the holder tab (9).

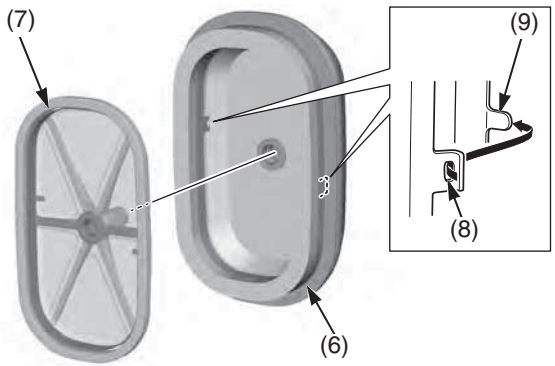


(6) air cleaner element
(7) air cleaner holder
(8) hole
(9) holder tab

(cont'd)

5. Wash the air cleaner in clean non-flammable cleaning solvent such as Pro Honda foam air filter cleaner. Then wash in hot, soapy water, rinse well, and allow to dry thoroughly. The air cleaner element is made in two pieces: inner and outer, which cannot be separated.
6. Clean the inside of the air cleaner housing.
7. Allow the air cleaner to dry thoroughly. After drying, apply 1.9 US oz (55 $cm^3$) of clean Pro Honda Foam Air Filter Oil or an equivalent air cleaner oil from the inside of the element. Place the element into a plastic bag (10) and spread the oil evenly by hand.

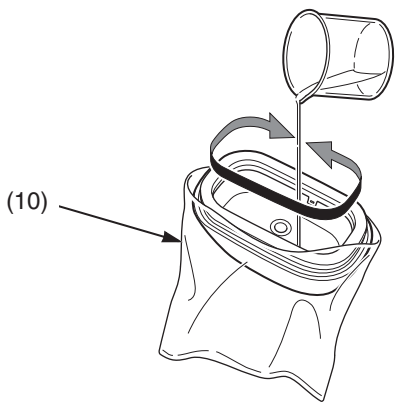


(10) plastic bag

8. Assemble the air cleaner element and holder. Install the holder tab in the hole of the air cleaner element.
9. Apply 0.05 – 0.19 oz (1.5 – 5.5 g) of Pro Honda Foam Air Filter Sealer or equivalent to the air cleaner element contact area of the air cleaner housing.
10. Install the air cleaner assembly (5) into the air cleaner housing stay (11).
11. Carefully position the sealing flange of the element to prevent dirt intrusion.

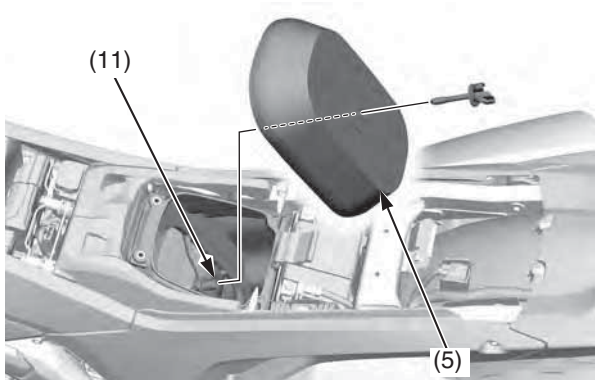


(5) air cleaner assembly
(11) air cleaner housing stay

12. Install and tighten the air cleaner retaining bolt (4) to the specified torque:
    1.8 lbf·ft (2.4 N·m, 0.2 kgf·m)

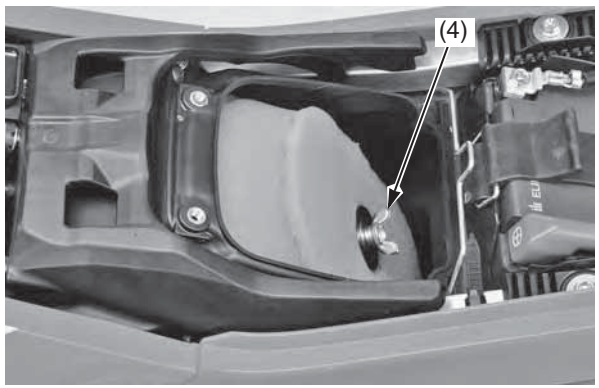


(4) air cleaner retaining bolt

**NOTICE**

*Improper installation of the air cleaner assembly may allow dirt and dust to enter the engine and cause rapid wear of the piston rings and cylinder.*

13. Install the air cleaner lid (3) onto the air cleaner housing. Install and tighten the air cleaner lid bolts (1). Secure the air cleaner lid with the retainer (2) as shown.

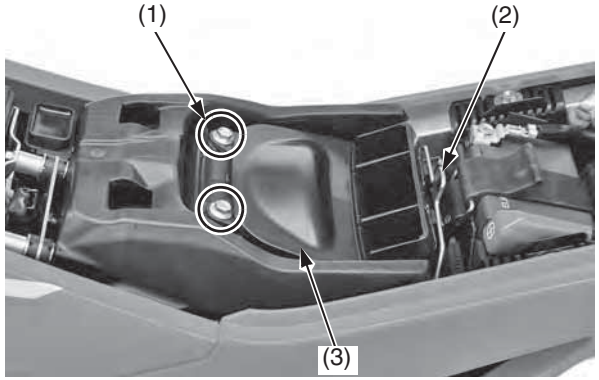


(1) bolts
(2) retainer
(3) air cleaner lid

14. Install the seat (page 43).

Refer to *Important Safety Precautions* on page 31.

Service more frequently if your CRF is ridden in the rain or often at full throttle.
Service the breather if you can see deposits in the transparent section of the crankcase breather tube. If the breather tube overflows, the air filter may become contaminated with engine oil causing poor engine performance.

## Draining

1. Remove the crankcase breather tube plugs (1) from the crankcase breather tubes (2) and drain deposits into a suitable container.
2. Reinstall the crankcase breather tube plugs.

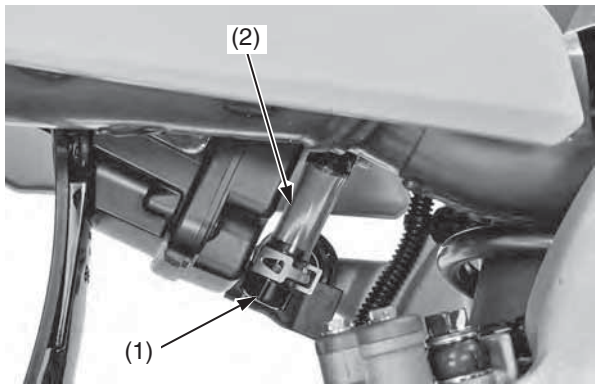


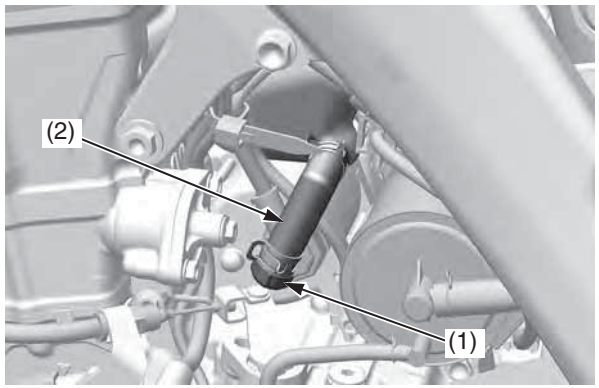


(1) crankcase breather tube plugs
(2) crankcase breather tubes

Refer to *Important Safety Precautions* on page 31.

## Throttle Freeplay

Inspection
Check freeplay (1).
Freeplay: 1/8 – 1/4 in (3 – 6 mm)
If necessary, adjust to the specified range.

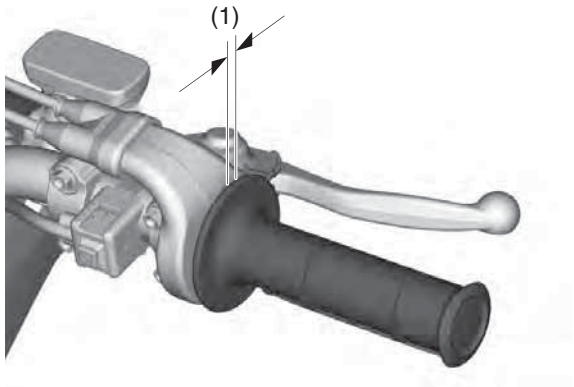


(1) freeplay

Upper Adjustment
Minor adjustments are generally made with the upper adjuster.

1. Loosen the lock nut (1).
2. Turn the adjuster (2).
   Turning the adjuster in direction (–) will decrease freeplay and turning it in direction (+) will increase freeplay.

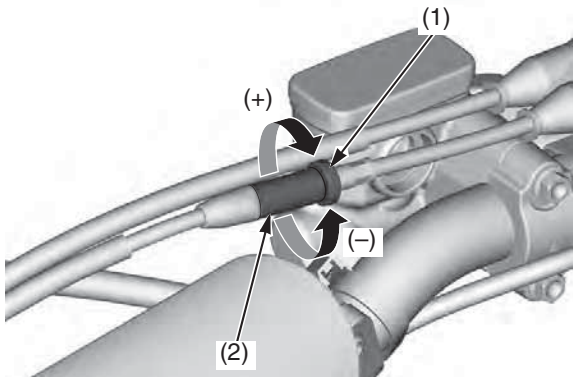


(1) lock nut
(2) adjuster
(+) increase freeplay
(–) decrease freeplay

3. Tighten the lock nut securely.
4. After adjustment, check for smooth rotation of the throttle grip from fully closed to fully open in all steering positions.
   If the adjuster is threaded out near its limit or the correct freeplay cannot be reached, turn the adjuster all the way in and back out one turn. Tighten the lock nut securely.
   Make the adjustment with the lower adjuster.

Lower Adjustment
The lower adjuster is used for major freeplay adjustment, such as after replacing the throttle cables or removing the throttle body. It is also used if you cannot get the proper adjustment with the upper adjuster.

1. Loosen the lock nut (1).
2. Turn the adjuster (2) in direction (–) to decrease freeplay, and in direction (+) to increase freeplay.

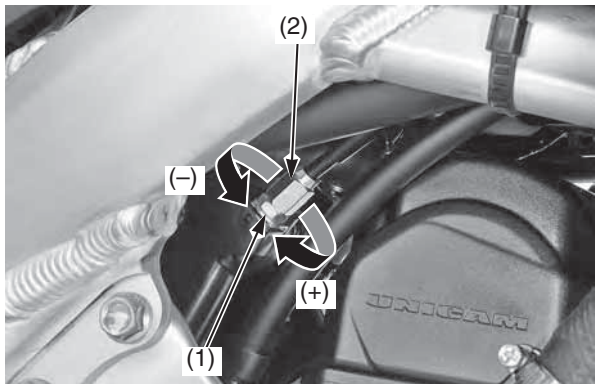


(1) lock nut
(2) adjuster
(+) increase freeplay
(–) decrease freeplay

3. Tighten the lock nut to the specified torque:
   3.0 lbf·ft (4.0 N·m, 0.4 kgf·m)
4. Operate the throttle grip to ensure that it functions smoothly and returns completely.

If you can't get the freeplay within the specified range, contact your dealer.

## Throttle Inspection

1. Check that the throttle assembly is positioned properly (the end of the throttle housing (1) is aligned with the paint mark (2) on the handlebar) and the securing bolts are tight.

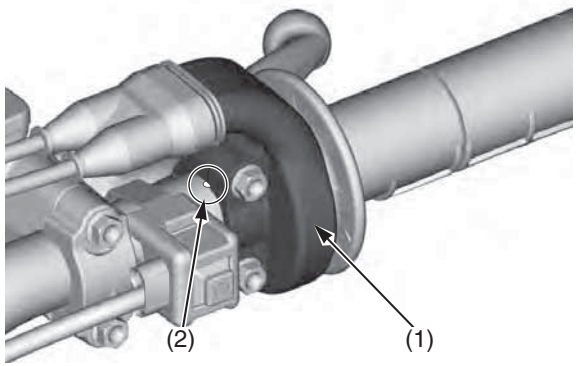


(1) throttle housing
(2) paint mark

2. Check for smooth rotation of the throttle (3) from fully open to fully closed in all steering positions. If there is a problem, see your dealer.

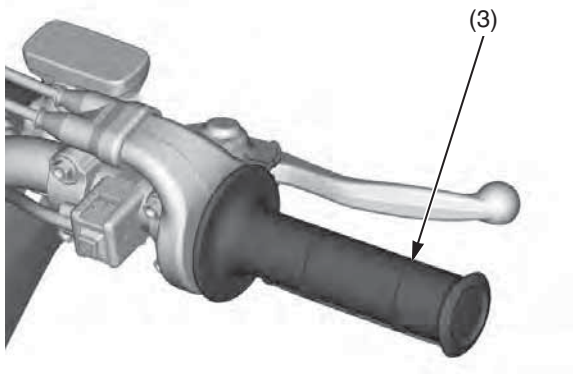


(3) throttle

3. Inspect the condition of the throttle cables from the throttle grip down to the throttle body. If the cable is kinked or chafed, have it replaced.
4. Check the cables for tension or stress in all steering positions.
5. Lubricate the cables with a commercially available cable lubricant.

## Throttle Cable Lubrication

Check for smooth rotation of the throttle. If necessary, apply multi-purpose grease to sliding surface of the throttle cable ends.

1. Slide the dust cover (1).
2. Remove the throttle housing bolts (2).
3. Remove the throttle housing (3) from the throttle pipe (4).
4. Thoroughly lubricate the throttle cable ends (5) with multi-purpose grease.

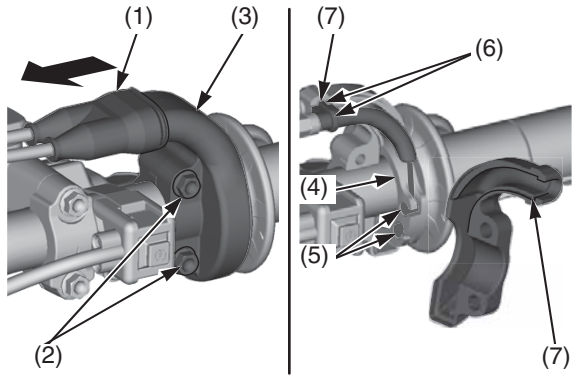


(1) dust cover
(2) housing bolts
(3) throttle housing
(4) throttle pipe
(5) throttle cable ends
(6) lugs
(7) grooves

5. Install the throttle housing, then tighten the throttle housing bolts to the specified torque: 7 lbf·ft (10 N·m, 1.0 kgf·m)

**NOTICE**

*Align the lugs (6) of the wire guide with the grooves (7) of the throttle housing.*

6. Install the dust cover reverse order.

If the throttle operation is not smooth, replace the throttle cable.
Be sure the throttle returns freely from fully open to fully closed automatically, in all steering positions.

# Engine Idle Speed

Refer to *Important Safety Precautions* on page 31.

Remember, idle speed adjustment is not a "cure-all" for other problems in your engine's PGM-FI system. Adjusting the idle speed will not compensate for a fault elsewhere.

The engine must be at normal operating temperature for accurate idle speed adjustment. When pushed in, the fast idle knob acts as the idle adjustment screw.
Turning it counterclockwise results in a faster/higher idle speed.
Turning it clockwise results in a slower/lower idle speed.

## Idle Speed Adjustment

1. If the engine is cold, start it and warm it up 3 minutes. Then shut it off.
2. Connect a tachometer to the engine.
3. Shift the transmission into neutral. Start the engine.
4. Adjust idle speed with the fast idle knob (1).
   Idle speed: 1,800 ± 100 rpm

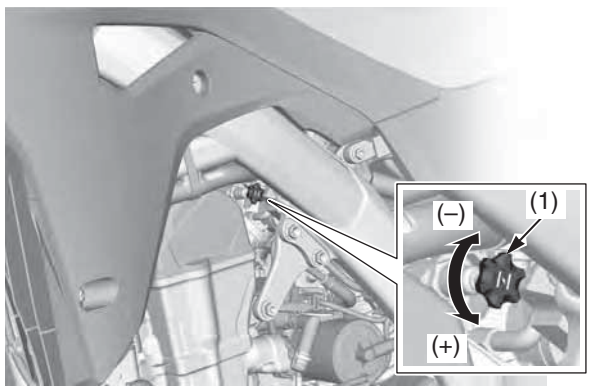


(1) fast idle knob
(+) increase
(–) decrease

Refer to *Important Safety Precautions* on page 31.

## Clutch Lever Freeplay

Inspection
Check freeplay (1).
Freeplay: 3/8 – 13/16 in (10 – 20 mm)
If necessary, adjust to the specified range.

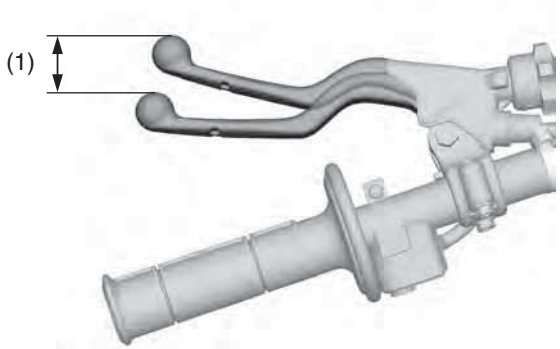


(1) freeplay

Improper freeplay adjustment can cause premature clutch wear.

Make sure to adjust the clutch lever freeplay after the clutch cable is disconnected.

Cable End Adjustment
Minor adjustments are generally made with the clutch cable end adjuster.

Turning the clutch cable end adjuster (1) in direction (+) will increase freeplay and turning it in direction (–) will decrease freeplay.

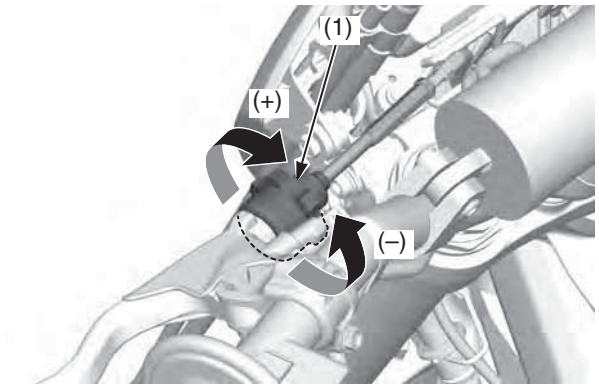


(1) clutch cable end adjuster
(+) increase freeplay
(–) decrease freeplay

If the adjuster is threaded out near its limit or the correct freeplay cannot be reached, turn the adjuster all the way in and back out five turns and make the adjustment with the integral cable adjuster.

Integral Cable Adjustment
The integral cable adjuster is used if the cable end adjuster is threaded out near its limit — or the correct freeplay cannot be obtained.

1. Turn the cable end adjuster in direction (+) until it seats lightly and then turn it out five turns.
2. Loosen the lock nut (1).
3. Turn the integral cable adjuster (2) to obtain the specified freeplay.
4. Tighten the lock nut. Check the freeplay.

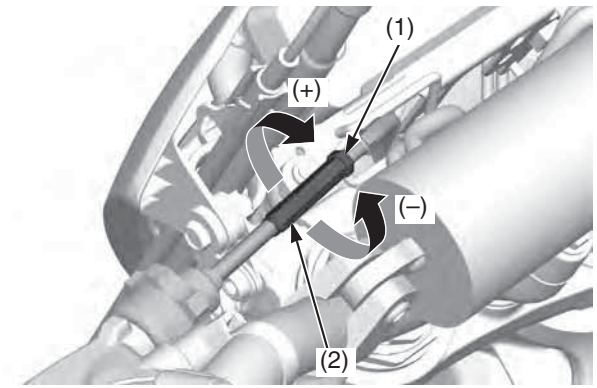


(1) lock nut
(2) integral cable adjuster
(+) increase freeplay
(–) decrease freeplay

5. Start the engine, pull the clutch lever in, and shift into gear. Make sure the engine does not stall and the motorcycle does not creep. Gradually release the clutch lever and open the throttle. Your CRF should move smoothly and accelerate gradually.

If you can't get proper adjustment, or the clutch does not work properly, the cable may be kinked or worn, or the clutch discs may be worn.
Inspect the clutch discs and plates (page 78).

## Other Inspections

- Check that the clutch lever assembly is positioned properly (the end of the holder (1) is aligned with the paint mark (2) on the handlebar) and the securing bolts are tight.

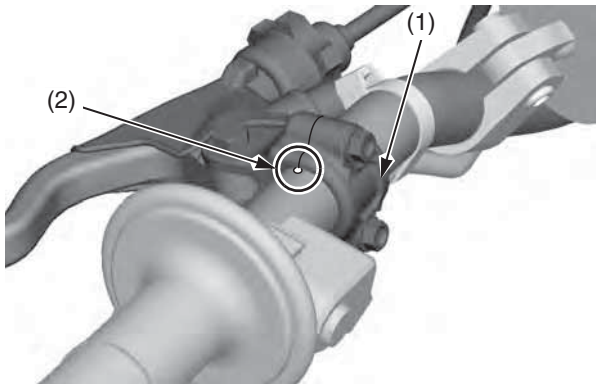


(1) holder
(2) paint mark

- Check the clutch cable for kinks or signs of wear. If necessary, have it replaced.

## Clutch Operation

1. Check for smooth clutch lever operation. If necessary, lubricate the clutch lever pivot bolt sliding surface with grease and/or clutch cable with commercially available cable lubricant.
2. Check the clutch cable for deterioration, kinks, or damage.

## Clutch Cable Lubrication

Check for smooth clutch lever operation. If necessary, apply multi-purpose grease to sliding surface of the clutch cable ends.

1. Release the dust cover (1).
2. Turn the adjuster (2) and remove the clutch cable (3).
3. Disconnect the clutch cable end from the clutch lever (4).
4. Thoroughly lubricate the clutch cable end (5) with multi-purpose grease.

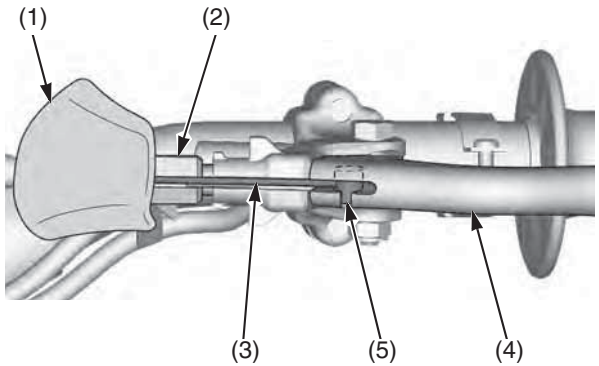


(1) dust cover
(2) adjuster
(3) clutch cable
(4) clutch lever
(5) clutch cable end

5. Connect the clutch cable end to the lever.
6. Install the clutch cable and turn the adjuster.
7. Remove the clutch cable end adjuster (6).
8. Apply multi-purpose grease to the clutch cable end adjuster inside surface.

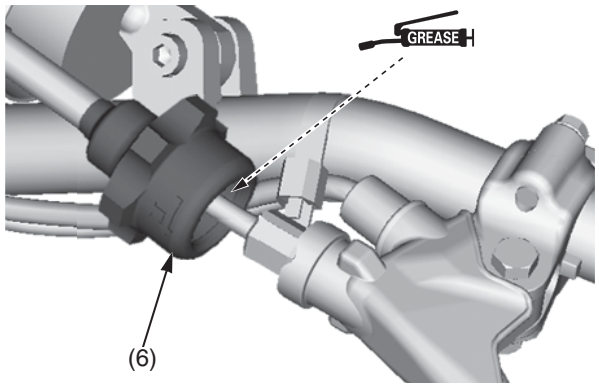


(6) clutch cable end adjuster

9. Recheck clutch lever freeplay and adjust as necessary (page 75).

If the clutch lever operation is not smooth, replace the clutch cable.

## Clutch Disc/Plate Removal

1. Drain the engine oil (page 64).
2. Remove the four right crankcase over cover bolts (1) and over cover (2).

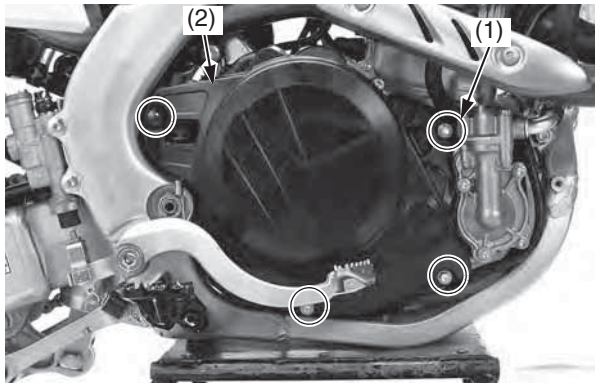


(1) bolts (2) over cover

3. Remove the six clutch cover bolts (3) and clutch cover (4).

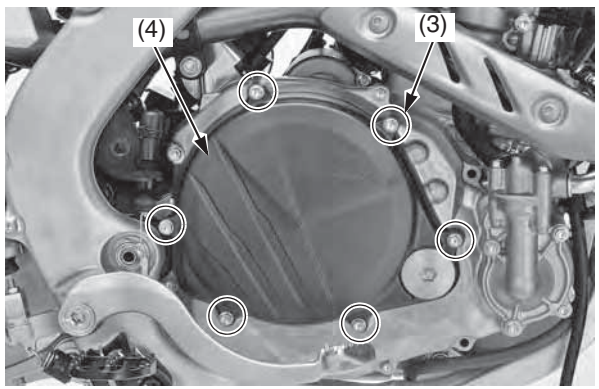


(3) clutch cover bolts (4) clutch cover

4. Remove the six clutch spring bolts and springs (5).

Loosen the bolts in a crisscross pattern in two or three progressive steps.

5. Remove the clutch pressure plate (6).

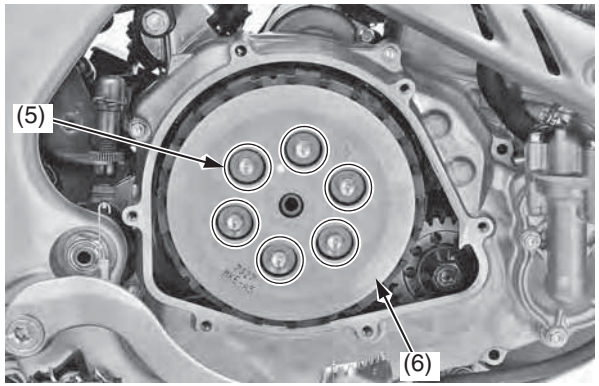


(5) clutch spring bolts and springs
(6) clutch pressure plate

6. Remove the clutch lifter (7) first, then remove the clutch lifter rod (8).

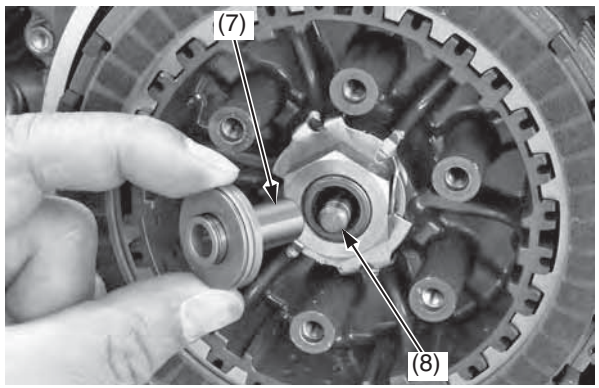


(7) clutch lifter (8) clutch lifter rod

7. Check the operation of the thrust bearing (9) built in clutch lifter with your finger. The bearing should turn smoothly and quietly.

(9) thrust bearing

If the operation is not smooth, refer to an official Honda Service Manual (page 182) for bearing disassembly or see your dealer.

8. Remove the seven clutch discs, six clutch plates, judder spring and spring seat (10).

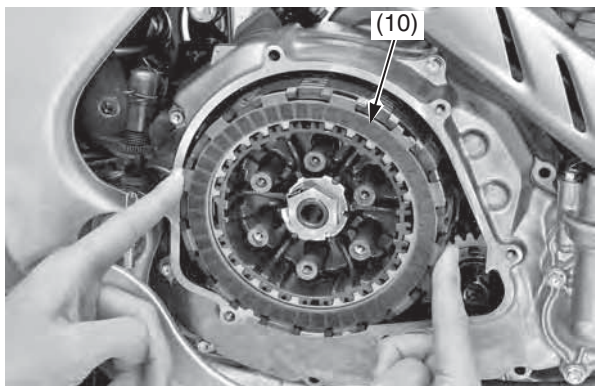


(10) clutch discs, clutch plates, judder spring and spring seat

## Clutch Disc/Plate/Spring Inspection

- Replace the clutch discs (1) if they show signs of scoring or discoloration.
  Measure the thickness of each clutch disc.
  Service Limit: 0.112 in (2.85 mm)
  Replace the clutch discs and clutch plates as a set.

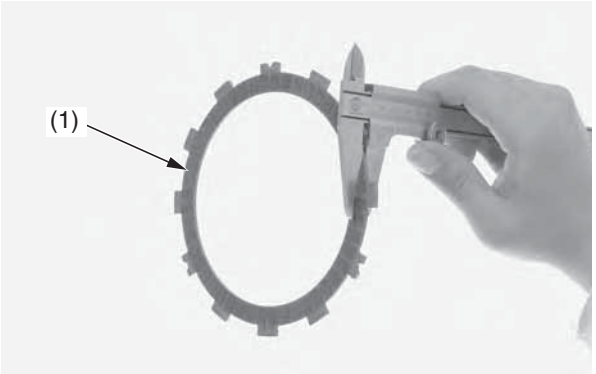


(1) clutch discs

- Check the clutch plates (2) for excessive warpage or discoloration.
  Check the plate warpage on a surface plate using a feeler gauge.
  Service Limit: 0.006 in (0.15 mm)
  Replace the clutch discs and plates as a set.

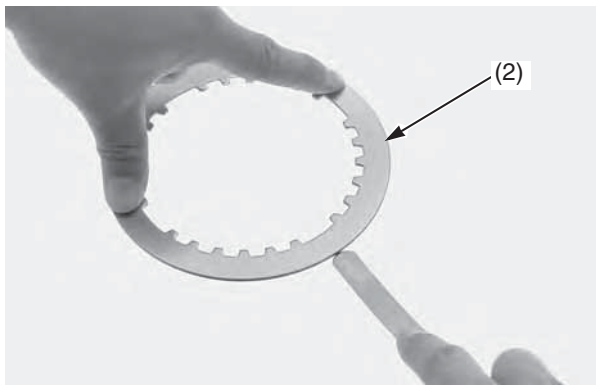


(2) clutch plates

- Check the clutch springs (3) for wear or damage.
  Measure the thickness of each clutch spring.
  Service Limit: 1.79 in (45.5 mm)
  Replace the clutch spring as a set.

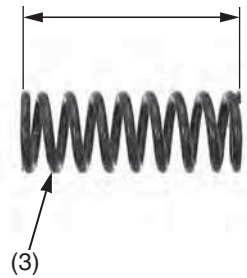


(3) clutch springs

- If you feel the clutch slippage when replacing the clutch discs and plates, replace the clutch springs.

## Clutch Disc/Plate Installation

1. Install the spring seat (1) and judder spring (2) onto the clutch center as shown.
   Coat the clutch discs with engine oil.
2. Install the clutch disc A (larger I.D. disc) (3) onto the clutch outer.
   Stack the six clutch plates (4), five clutch discs B (5) alternately while aligning the lugs (6) of the clutch center with the groove (7) of the clutch plates as shown.
   Install the clutch disc C (8) by aligning its tabs (9) with the shallow slots (10) of the clutch outer.

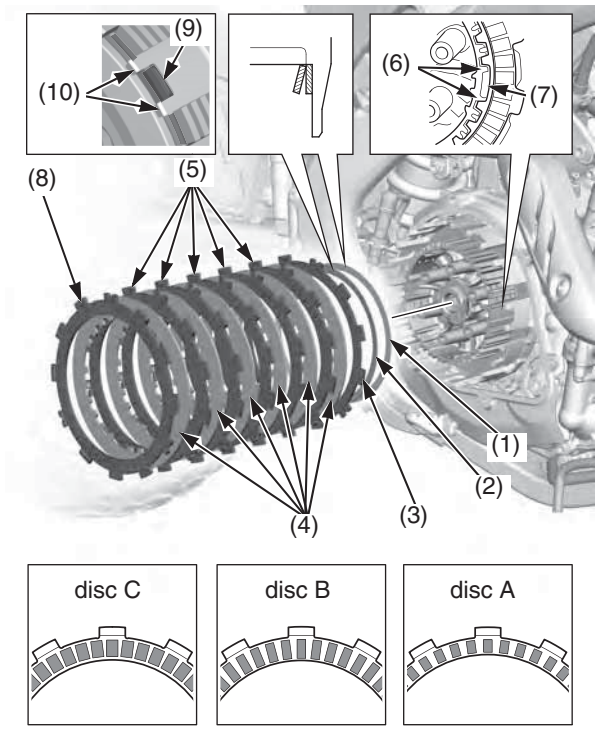


(1) spring seat
(2) judder spring
(3) clutch disc A
(4) clutch plates
(5) clutch discs B
(6) lugs
(7) groove
(8) clutch disc C
(9) tabs
(10) shallow slots

3. Insert the clutch lifter rod (11) into the mainshaft.
4. Install the clutch lifter (12) onto the rod.

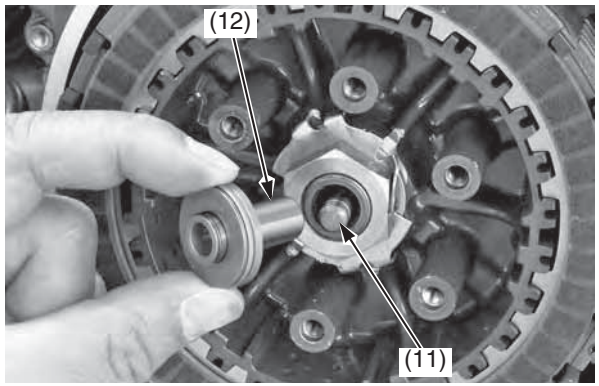


(11) clutch lifter rod (12) clutch lifter

5. Install the clutch pressure plate (13).
6. Install the six clutch springs and bolts (14).
7. Tighten the bolts in a crisscross pattern in two or three steps to the specified torque:
   9 lbf·ft (12 N·m, 1.2 kgf·m)

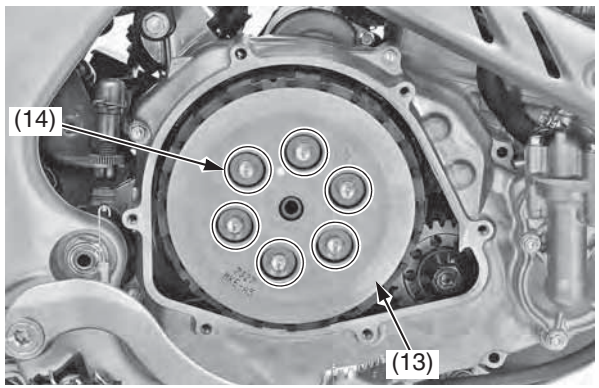


(13) clutch pressure plate
(14) clutch spring bolts and springs

8. Apply engine oil to a new O-ring (15) and install it in the groove of the clutch cover (16).
9. Install the cover by tightening the six cover bolts in a crisscross pattern in two or three steps to the specified torque:
   7 lbf·ft (10 N·m, 1.0 kgf·m)

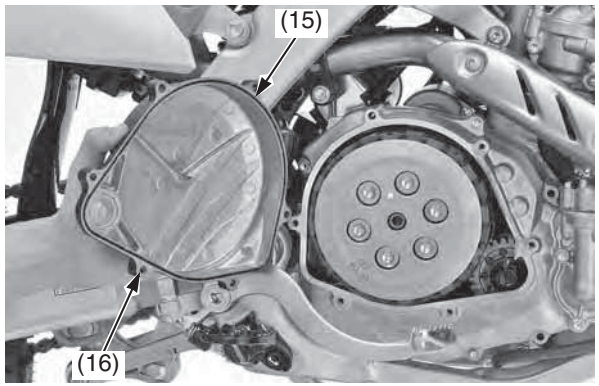


(15) O-ring (new)
(16) clutch cover

10. Install the right crankcase over cover (17) and tighten the four right crankcase over cover bolts (18).

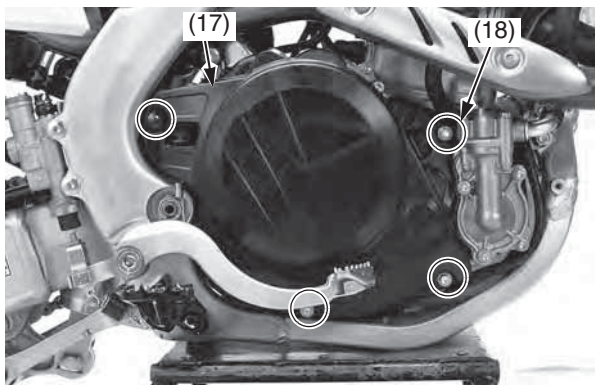


(17) over cover (18) bolts

11. Pour recommended engine oil to the specified level (page 64).

# Spark Plug

Refer to *Important Safety Precautions* on page 31.

## Spark Plug Recommendation

The recommended standard spark plug is satisfactory for most racing conditions.

| | |
|---|---|
| Standard | SILMAR9A – 9S (NGK) |
| Optional | SILMAR10A – 9S (NGK) |

Use only the recommended type of spark plugs in the recommended heat range.

**NOTICE**

*Using a spark plug with an improper heat range or incorrect reach can cause engine damage.*
*Using a non-resistor spark plug may cause ignition problems.*

This motorcycle uses a spark plug that has an iridium tip in the center electrode and a platinum tip in the side electrode.

Be sure to observe the following when servicing the spark plug.

- Do not clean the spark plug. If an electrode is contaminated with accumulated objects or dirt, replace the spark plug with a new one.
- To check the spark plug gap, use only a "wire-type feeler gauge." To prevent damaging the iridium tip of the center electrode and platinum tip of the side electrode, never use a "leaf-type feeler gauge."
- Do not adjust the spark plug gap. If the gap is out of specification, replace the spark plug with a new one.

## Spark Plug Inspection & Replacement

1. Remove the seat and fuel tank (pages 43, 45).
2. Disconnect the spark plug cap (1).
3. Clean any dirt from around the spark plug base.
4. Remove the spark plug (2).

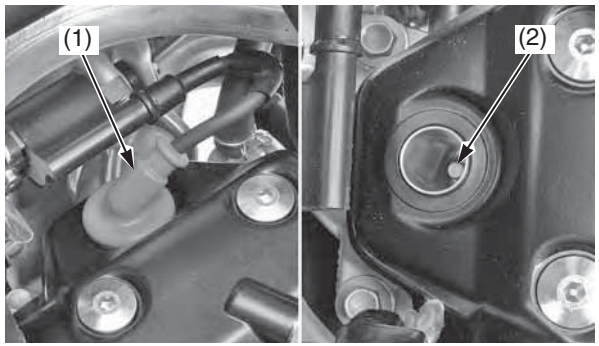


(1) spark plug cap (2) spark plug

5. Check the electrodes for wear or deposits, the sealing gasket (3) for damage, and the insulator for cracks. Replace if you detect them.
6. Check the spark plug gap (4), using a wire-type feeler gauge. If the gap is out of specifications, replace the plug with a new one.
   The recommended spark plug gap is:
   0.031 – 0.035 in (0.8 – 0.9 mm)

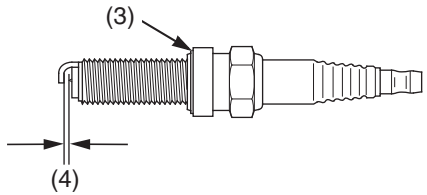


(3) sealing gasket
(4) spark plug gap

7. To obtain accurate spark plug readings, accelerate up to speed on a straightaway. Press and hold the engine stop button and disengage the clutch by pulling the lever in. Coast to a stop, then remove and inspect the spark plug. The porcelain insulator around the center electrode should appear tan or medium gray.

If you're using a new plug, ride for 10 - 15 minutes before taking a plug reading; a brand-new plug will not color initially.

If the electrodes appear burnt, or the insulator is white or light gray (lean) or the electrodes and insulator are black or fouled (rich), there is a problem elsewhere (page 152).
Check the PGM-FI system and ignition timing.

8. With the sealing gasket attached, thread the spark plug in by hand to prevent cross-threading.
9. Tighten the spark plug.
   - If the old plug is good:
     1/12 turn after it seats.
   - If installing a new plug, tighten it twice to prevent loosening:
     a) First, tighten the plug:
        1/4 turn after it seats.
     b) Then loosen the plug.
     c) Next, tighten the plug again:
        1/12 turn after it seats.

   When using a torque wrench, tighten the spark plug to the specified torque:
   16 lbf·ft (22 N·m, 2.2 kgf·m)

**NOTICE**

*An improperly tightened spark plug can damage the engine. If a plug is too loose, the piston may be damaged. If a plug is too tight, the threads may be damaged.*

10. Connect the spark plug cap. Take care to avoid pinching any cables or wires.
11. Install the fuel tank and seat (pages 43, 47).

Refer to *Important Safety Precautions* on page 31.

Excessive valve clearance will cause noise and eventual engine damage. Little or no clearance will prevent the valve from closing and cause valve damage and power loss. Check valve clearance when the engine is cold at the intervals specified in the Maintenance Schedule (pages 33, 34).

The checking or adjusting of the valve clearance should be performed while the engine is cold. The valve clearance will change as engine temperature rises.

## Cylinder Head Cover Removal

Before inspection, clean the engine thoroughly to keep dirt from entering the engine.

1. Remove the seat and fuel tank (pages 43, 45).
2. Disconnect the breather tube (1) and spark plug cap (2).

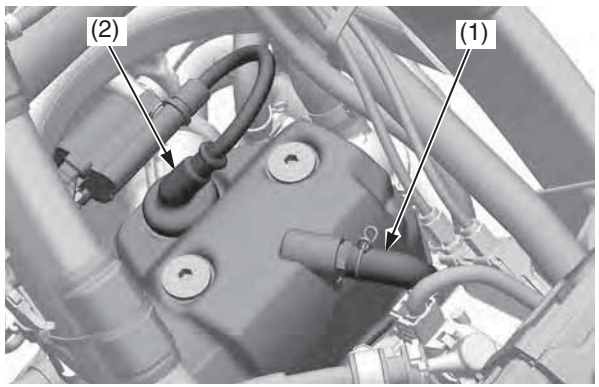


(1) breather tube (2) spark plug cap

3. Remove the cylinder head cover socket bolts (3), rubber seals (4), cylinder head cover (5) and spark plug hole packing (6).

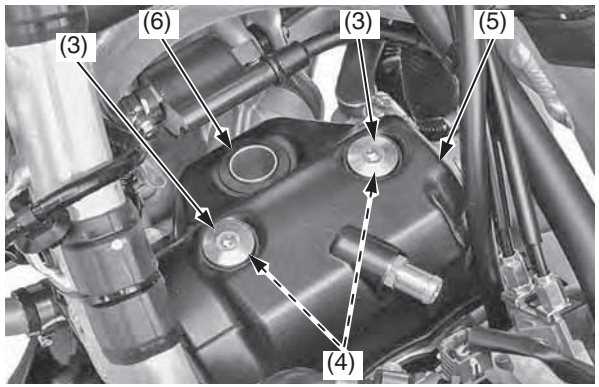


(3) cylinder head cover socket bolts
(4) cylinder head cover rubber seals
(5) cylinder head cover
(6) spark plug hole packing

## Positioning At TDC On The Compression Stroke

1. Remove the right crankcase over cover (page 77).
2. Remove the crankshaft hole cap (1).

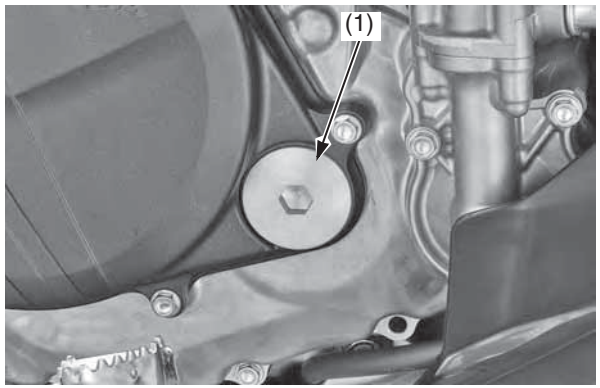


(1) crankshaft hole cap

3. Remove the spark plug (page 80).
4. Remove the cylinder head cover (page 81).

5. Rotate the crankshaft by turning the primary drive gear bolt (2) clockwise until "T" mark (3) on the primary drive gear aligns with the index mark (4) on the clutch cover. In this position, the piston may either be on the compression or exhaust stroke at TDC. If the primary drive gear passed the "T" mark, rotate the primary drive gear bolt clockwise again and align the "T" mark with the index mark.
   Make sure that the decompressor weight (5) is upper position.

crankshaft side:

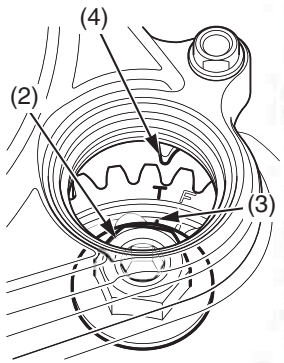


camshaft side:

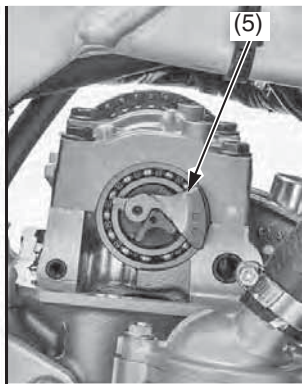


(2) primary drive gear bolt
(3) "T" mark
(4) index mark
(5) decompressor weight

6. Check the timing marks (6) on the cam sprocket aligns with the camshaft holder mating surface (7) of the cylinder head.

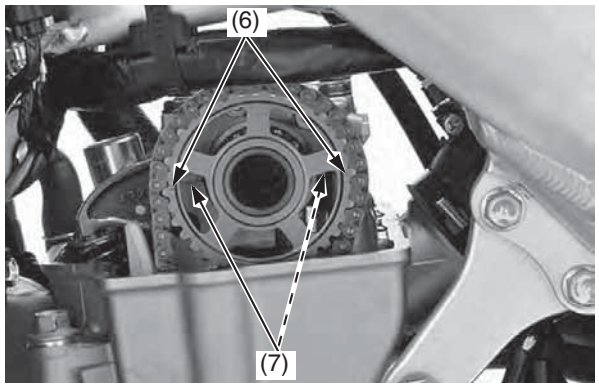


(6) timing marks
(7) camshaft holder mating surface

7. The inspection must be made when the piston is at the top of the compression stroke when both the intake and exhaust valves are closed. This condition can be determined by moving the rocker arms (8).

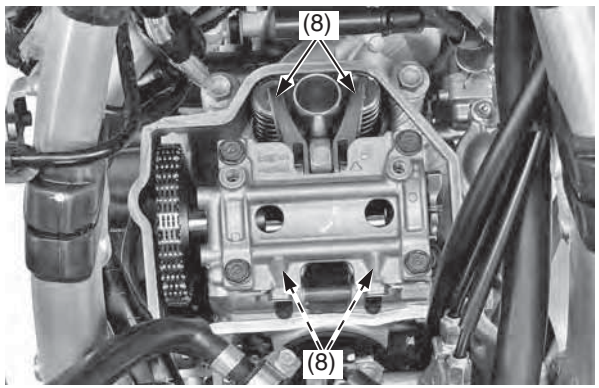


(8) rocker arms

## Valve Clearance Inspection

1. Set the piston at TDC on the compression stroke (page 82).
2. Measure the intake valve clearances by inserting a feeler gauge (1) between the intake rocker arms (2) and camshaft cam lobes (3).

**NOTICE**

*Be careful not to damage the intake rocker arms.*

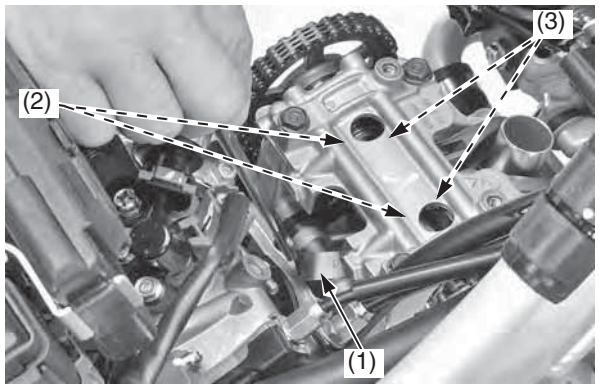


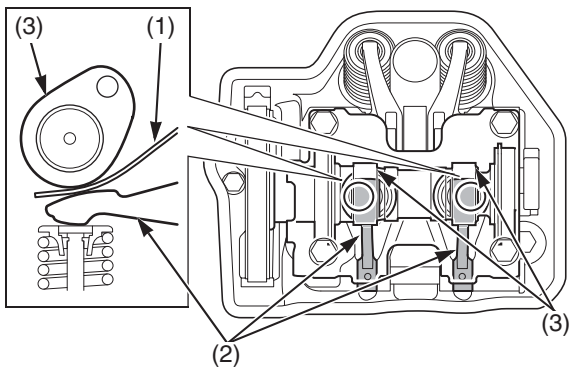


(1) feeler gauge
(2) intake rocker arms
(3) camshaft cam lobes

Valve Clearance:
IN: 0.004 ± 0.001 in (0.11 ± 0.03 mm)

3. Measure the exhaust valve clearances by inserting a feeler gauge (1) between the exhaust rocker arms (4) and shims (5).

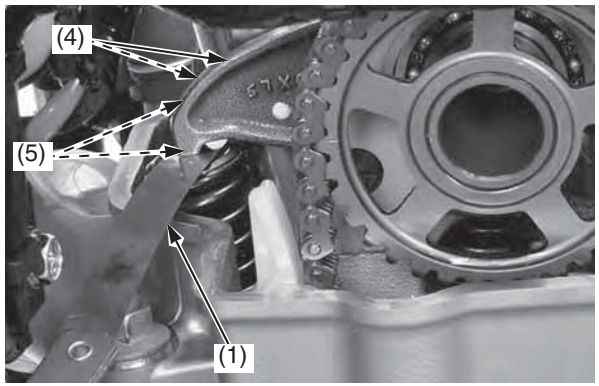


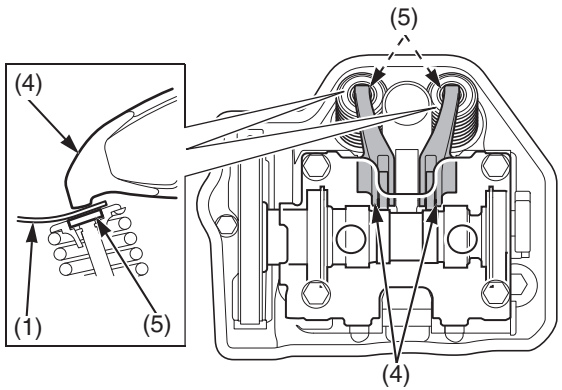


(1) feeler gauge
(4) exhaust rocker arms
(5) valve shims

Valve Clearance:
EX: 0.011 ± 0.001 in (0.28 ± 0.03 mm)

If intake valve clearance and exhaust valve clearance need adjustment, see Camshaft Removal (this page) and select the correct shim for each valve.

## Camshaft Removal

1. Record the intake valve and exhaust valve clearances (this page).
   Make sure the piston is at TDC on the compression stroke (page 82).
2. Remove the cam chain tensioner lifter cover bolt (1) and sealing washer (2).

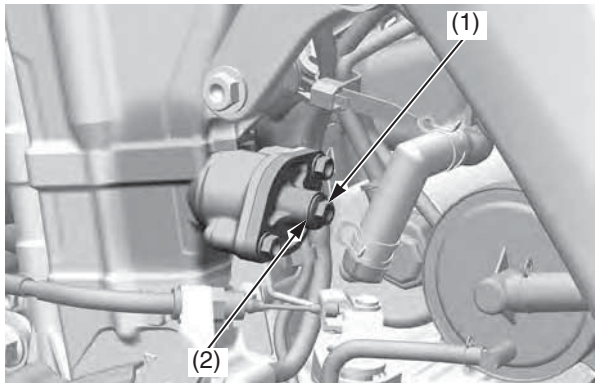


(1) cam chain tensioner lifter cover bolt
(2) sealing washer

(cont'd)

3. Insert the tensioner stopper (3) into the cam chain tensioner lifter (4).
   Turn the tensioner stopper clockwise and lock the cam chain tensioner lifter by pushing the handle (5) to the cam chain tensioner lifter.

• Tensioner stopper 07AMG-001A100

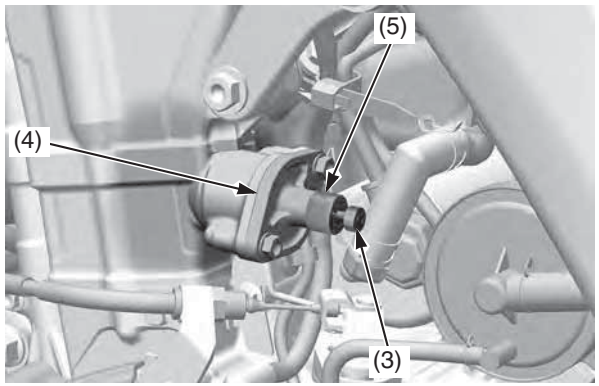


(3) tensioner stopper
(4) cam chain tensioner lifter
(5) handle

4. Check the piston is at TDC on the compression stroke (page 82).
   Loosen the camshaft holder bolts (6) in a crisscross pattern in two or three steps.
   Remove the camshaft holder bolts, camshaft holder (7) and set rings (8).

As you remove the camshaft holder, set rings may be sticking in the camshaft holder.

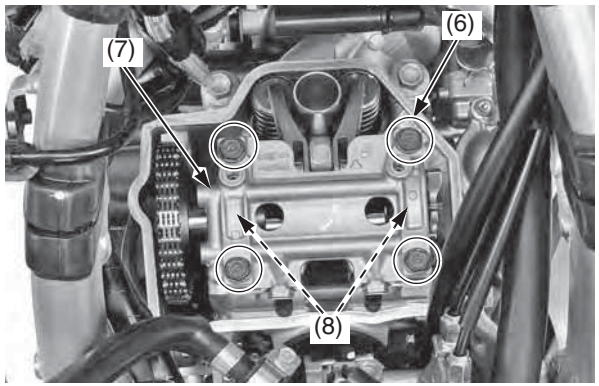


(6) camshaft holder bolts
(7) camshaft holder
(8) set rings

**NOTICE**

*Do not let the set rings fall into the crankcase.*

If the set rings are remained on the camshaft holder, remove the set rings carefully.

5. Slide the left camshaft bearing (9) and remove the camshaft (10) by removing the cam chain (11).

Suspend the cam chain with a piece of wire to prevent the chain from falling into the crankcase.

**NOTICE**

*Do not let the cam chain fall into the crankcase.*

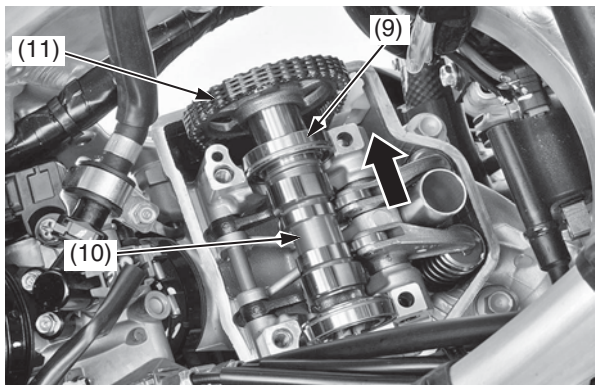


(9) left camshaft bearing
(10) camshaft
(11) cam chain

6. Lift the rocker arms (12) up and remove the shims (13).

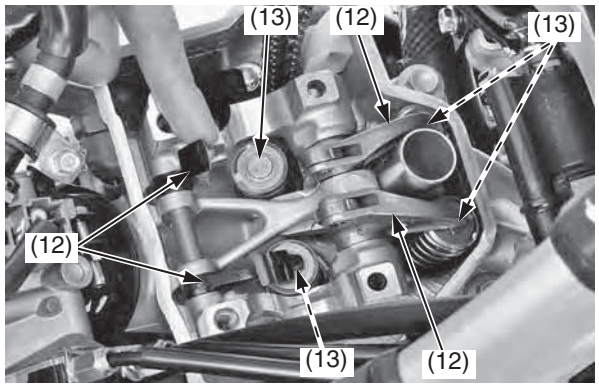


(12) rocker arms
(13) shims

**NOTICE**

*Be careful not to damage the intake rocker arms. Do not let the shims fall into the crankcase. Do not clean the intake rocker arms using a commercially available compound cleaner.*

## Shim Selection

1. Measure the shim thickness with a micrometer and record it.
   Seventy-three different shims (1) are available in 0.025 mm thickness intervals, from 1.200 mm (the thinnest) to 3.000 mm (the thickest).

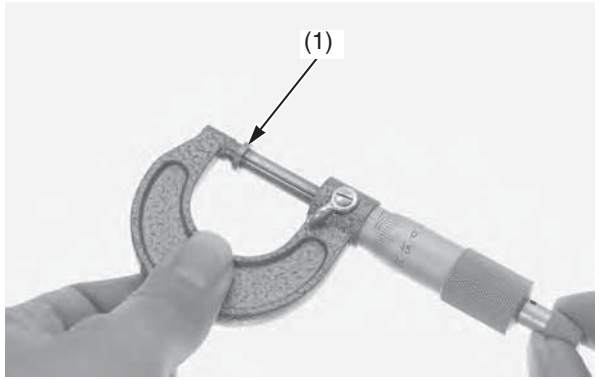


(1) shim

2. Calculate the new shim thickness using the equation below.

A = (B – C) + D

A: New shim thickness
B: Recorded valve clearance
C: Specified valve clearance
D: Old shim thickness

- Make sure of the correct shim thickness by measuring the shim with a micrometer.
- Reface the exhaust valve seat if carbon deposits result in a calculated dimension of over 3.000 mm.

**NOTICE**

*Do not lap the intake valves. They are titanium and have a thin oxide coating. Lapping will damage this coating.*

If a calculated dimension is out of specifications, have your motorcycle inspected by your dealer.

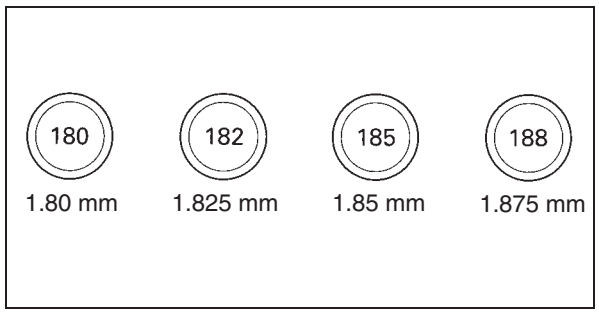

## Camshaft Installation

1. Lift the rocker arms (1) up and install the newly selected shims (2) on the valve spring retainers (3).

**NOTICE**

*Do not let the shims fall into the crankcase.*

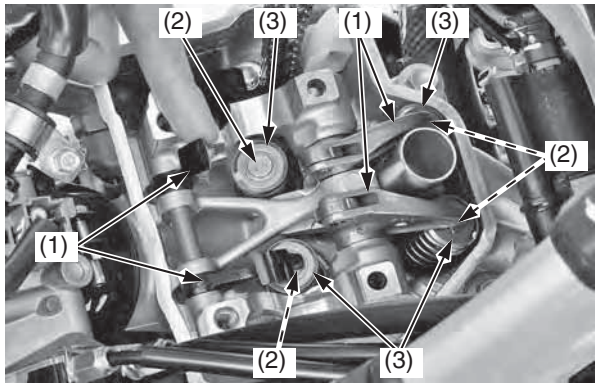


(1) rocker arms
(2) shims
(3) valve spring retainers

2. Check the operation of the plunger (4) by turning the decompressor weight (5) with your finger. The plunger should be retracted and protruded smoothly.

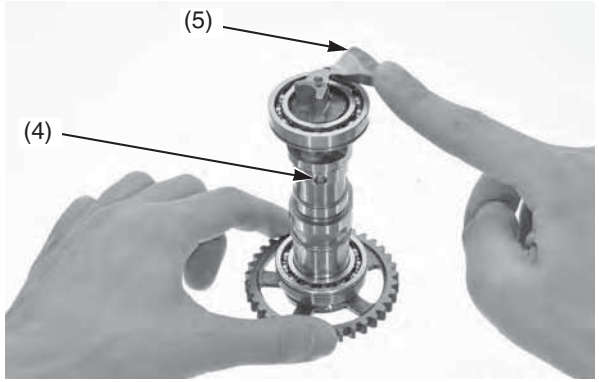


(4) plunger
(5) decompressor weight

If the operation is not smooth, refer to an official Honda Service Manual (page 182) for decompressor disassembly or see your dealer.

3. Make sure the piston is at TDC on the compression stroke (page 82).
4. Apply molybdenum disulfide oil (a mixture of 1/2 engine oil and 1/2 molybdenum disulfide grease containing more than 3% molybdenum disulfide additive Moly Paste 77) to the following parts.
   – camshaft cam lobes
   – plunger whole surface
5. Install the camshaft (6) onto the cylinder head with the decompressor weight (5) facing up as illustrated below.
6. Install the cam chain (7) over the cam sprocket (8).
   While holding the left camshaft bearing (9) to the left fully, install the camshaft (6) onto the cylinder head (10) and slide the left camshaft bearing to the right fully.

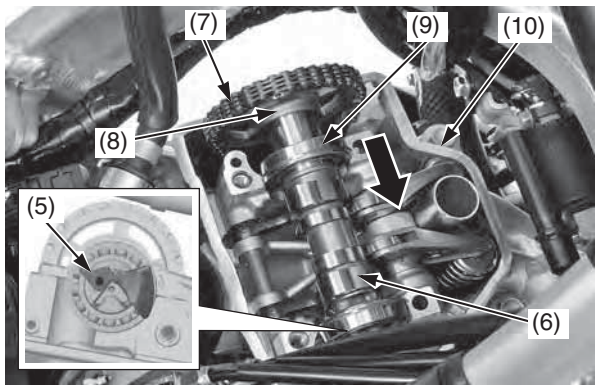


(5) decompressor weight
(6) camshaft
(7) cam chain
(8) cam sprocket
(9) left camshaft bearing
(10) cylinder head

7. Make sure that the timing mark (11) on the cam sprocket aligns with the camshaft holder mating surface (12) of the cylinder head.

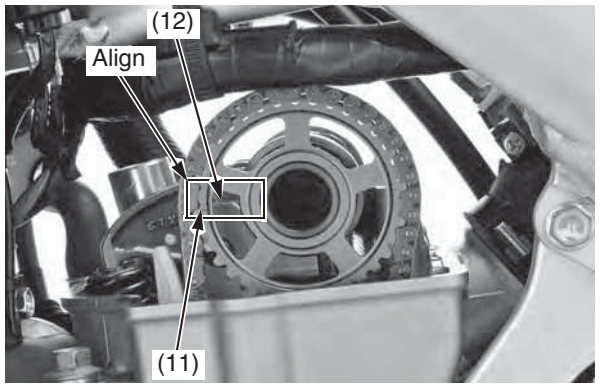


(11) timing mark
(12) camshaft holder mating surface

8. Make sure that the dowel pins (13) are installed into the camshaft holder (14).

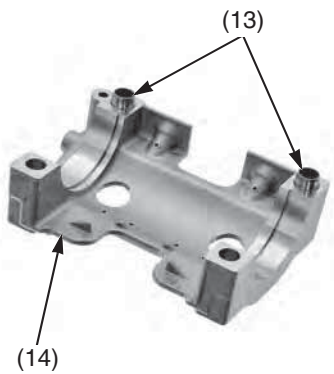


(13) dowel pins (14) camshaft holder

9. Install the set rings (15) on the camshaft bearing grooves (16).

**NOTICE**

*Do not let the set rings fall into the crankcase.*

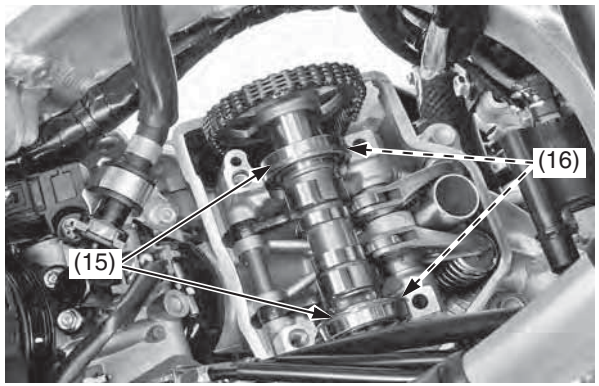


(15) set rings
(16) camshaft bearing grooves

10. Apply engine oil to the camshaft holder bolt threads.
    Install the camshaft holder (17) with the " Δ " mark (18) facing forward.
    Install the camshaft holder bolts (19) (20) and tighten the camshaft holder bolts to the specified torque:
    11 lbf·ft (15 N·m, 1.5 kgf·m)

Tighten the camshaft holder bolts in a crisscross pattern in two or three steps.

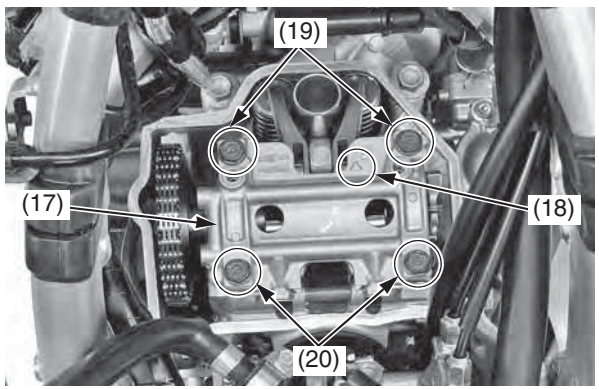


(17) camshaft holder (19) camshaft holder bolts (long)
(18) " Δ " mark (20) camshaft holder bolts (short)

11. Remove the tensioner stopper (21) from the cam chain tensioner lifter.

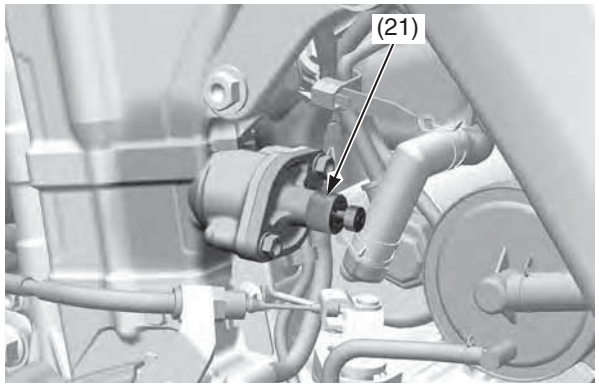


(21) tensioner stopper

12. Make sure that the piston is at TDC on the compression stroke (page 82).
    Check that the timing mark (11) on the cam sprocket aligns with the camshaft holder mating surface (12) of the cylinder head.

If the timing mark doesn't align with the camshaft holder mating surface, insert the tensioner stopper into the cam chain tensioner lifter (page 84) and then remove the cam chain and realign the timing mark.

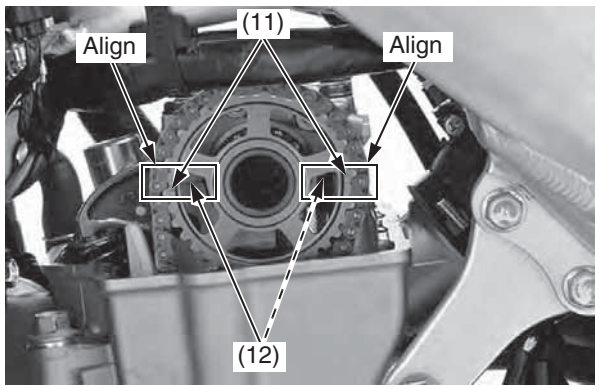


(11) timing mark
(12) camshaft holder mating surface

(cont'd)

13. Check that "T" mark (22) on the primary drive gear (23) aligns with the index mark (24) on the right crankcase cover.

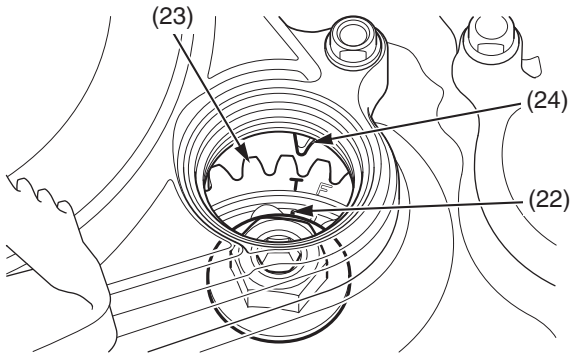


(22) "T" mark
(23) primary drive gear
(24) index mark

14. Rotate the camshaft by rotating the crankshaft clockwise several times.

15. Measure the intake and exhaust valve clearances by inserting a feeler gauge (25).
Valve Clearance:
IN: 0.004 ± 0.001 in (0.11 ± 0.03 mm)
EX: 0.011 ± 0.001 in (0.28 ± 0.03 mm)

Intake side: Exhaust side:

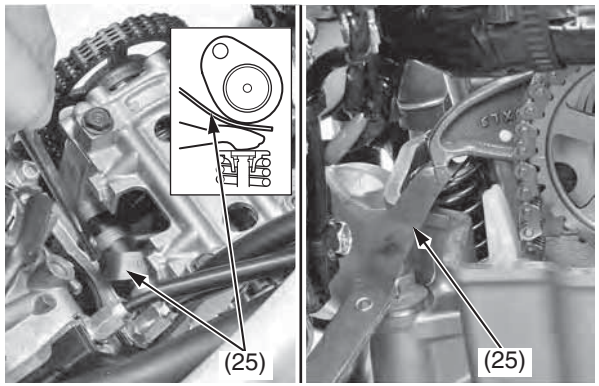


(25) feeler gauge

16. Install a new sealing washer (26) and tighten the cam chain tensioner lifter cover bolt (27).

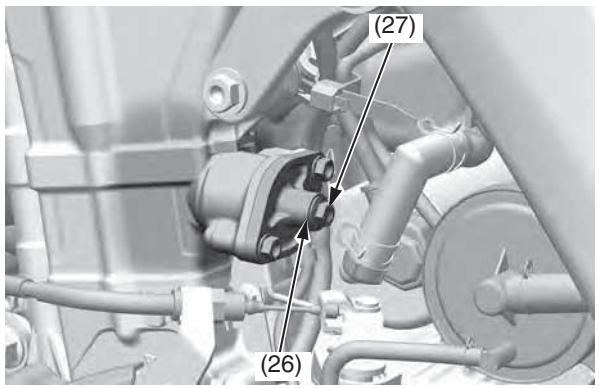


(26) sealing washer (new)
(27) cam chain tensioner lifter cover bolt

## Crankshaft Hole Cap Installation

1. Install the spark plug (page 80).
2. Coat a new O-ring (1) with engine oil and install it onto the crankshaft hole cap (2). Apply grease to the crankshaft hole cap threads. Install and tighten the crankshaft hole cap to the specified torque:
11 lbf·ft (15 N·m, 1.5 kgf·m)

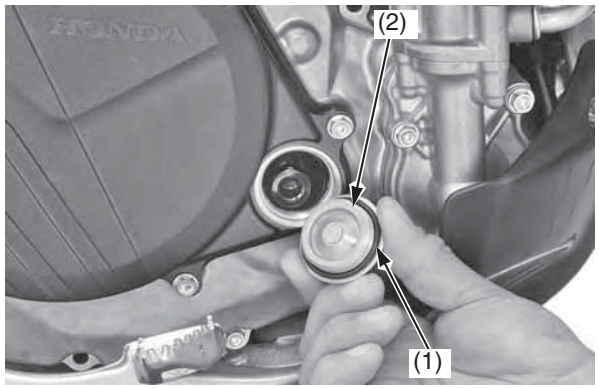


(1) O-ring (new)
(2) crankshaft hole cap

3. Install the right crankcase over cover (page 79).

## Cylinder Head Cover Installation

1. Check that the spark plug hole packing (1) is in good condition and replace it if necessary. Apply engine oil to the spark plug hole packing and install it to the cylinder head cover (2).
2. Check that the cylinder head cover packing (3) is in good condition and replace it if necessary. Clean and apply liquid sealant (TB1207B or equivalent) to the cylinder head cover groove (4) in the shown and install the cylinder head cover packing into the cylinder head cover groove.

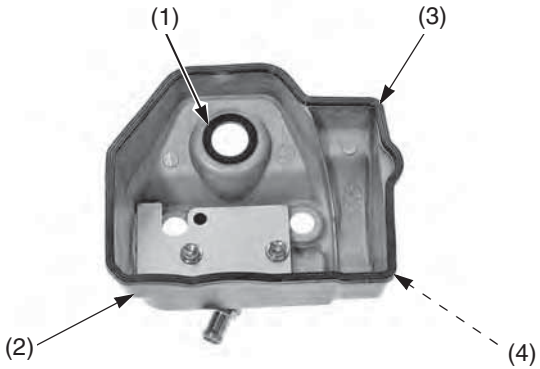


(1) spark plug hole packing
(2) cylinder head cover
(3) cylinder head cover packing
(4) cylinder head cover groove

3. Check that the rubber seals (5) are in good condition, replace them if necessary.
   Install the rubber seals onto the cylinder head cover with the "UP" marks (6) facing up.

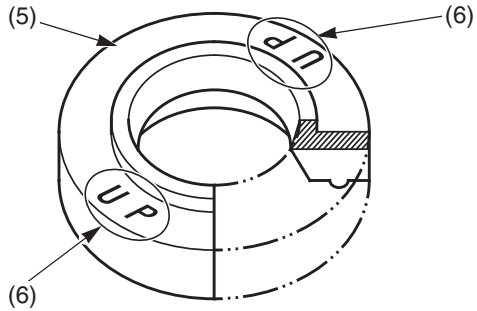


(5) rubber seals
(6) "UP" marks

4. Install the cylinder head cover (2) and tighten the cylinder head cover socket bolts (7) to the specified torque:
   7 lbf·ft (10 N·m, 1.0 kgf·m)

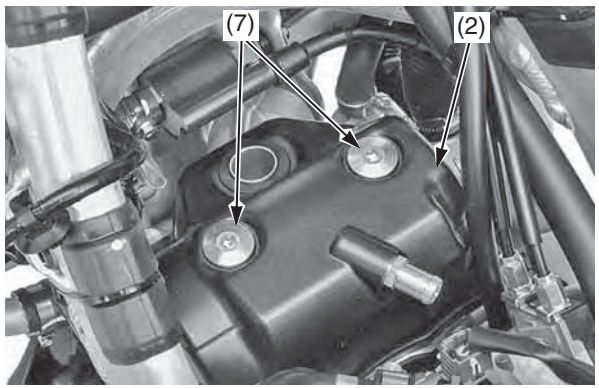


(2) cylinder head cover
(7) cylinder head cover socket bolts

5. Connect the spark plug cap (8) and breather tube (9).

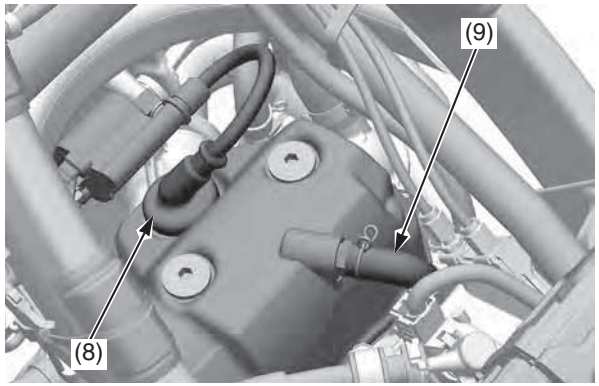


(8) spark plug cap
(9) breather tube

6. Install the fuel tank and seat (pages 43, 47).

Refer to *Important Safety Precautions* on page 31.

## Cylinder Head Removal

1. Clean the area above the engine before disassembly to prevent dirt falling into the engine.
2. Drain the radiator coolant after cooling the motorcycle (page 159).
3. Remove the seat and fuel tank (pages 43, 45).
4. Remove the muffler (page 127).
5. Remove the exhaust pipe (page 128).
6. Remove the subframe (page 49).
7. Remove the spark plug (page 80).
8. Remove the cylinder head cover (page 81).
9. Set the piston at TDC on the compression stroke (page 82).
10. Remove the camshaft holder, camshaft and shims (page 83).
11. Disconnect the ignition coil A connector (1) and B connector (2).
    Remove the ignition coil (3) by removing the ignition coil bolts (4).

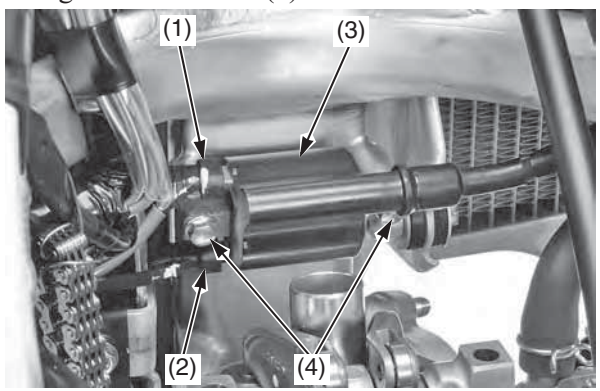


(1) ignition coil A connector
(2) ignition coil B connector
(3) ignition coil
(4) ignition coil bolts

12. Remove the right radiator lower mounting bolt (5) and washer (6).

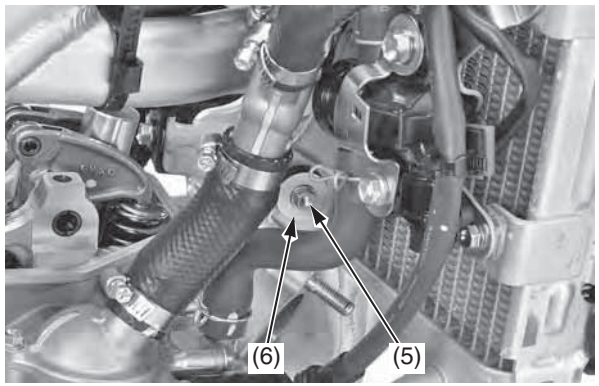


(5) right radiator lower mounting bolt
(6) washer

13. Loosen the insulator band screw (7) and pull the throttle body (8) out from the insulator (9). Disconnect the vacuum tube (10) from the insulator.

Do not hang the throttle body and support it with a suitable strap.

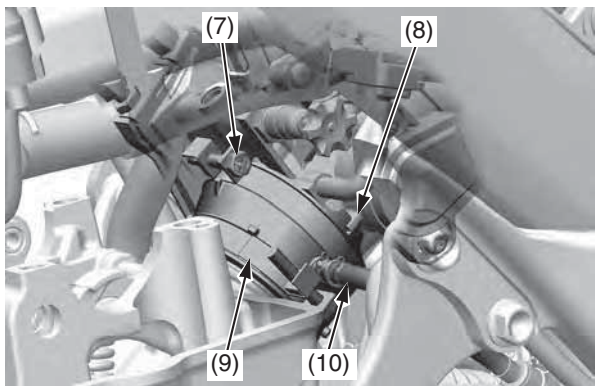


(7) insulator band screw
(8) throttle body
(9) insulator
(10) vacuum tube

14. Remove the thermostat case mounting bolts (11).
    Remove the thermostat case assembly (12) from the cylinder head (13).

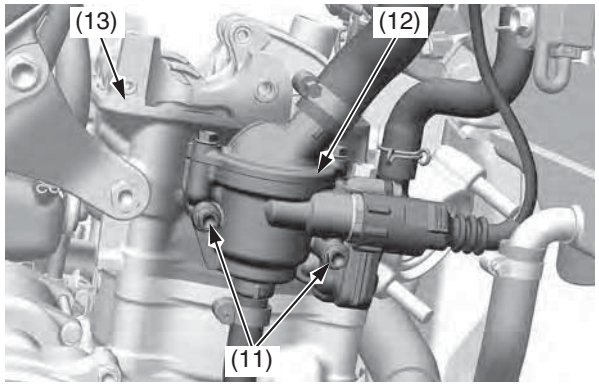


(11) bolts
(12) thermostat case
(13) cylinder head

15. Remove the cylinder head hanger bolts (14). Remove the cylinder head hanger plate bolts (15), left cylinder head hanger plate (16) and right cylinder head hanger plate (17).

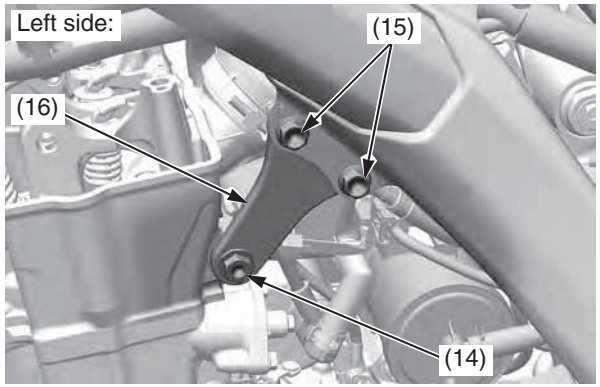


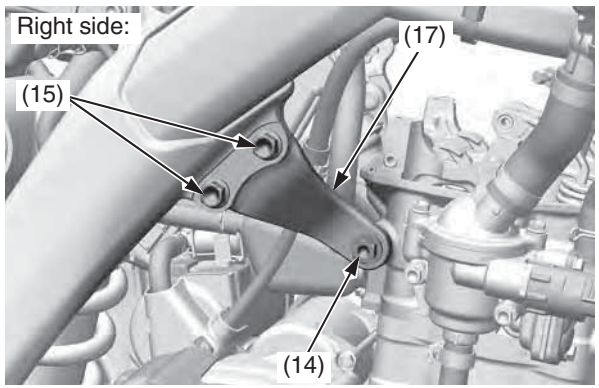


(14) cylinder head hanger bolts
(15) cylinder head hanger plate bolts
(16) left cylinder head hanger plate
(17) right cylinder head hanger plate

16. Remove the oil catch tank mounting bolt (18), oil catch tank (19), collar (20) and stay (21).

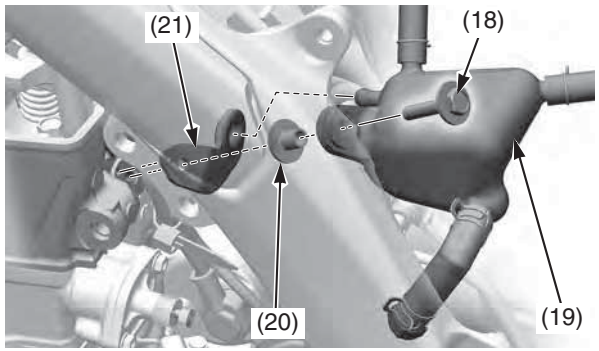


(18) bolt
(19) oil catch tank
(20) collar
(21) oil catch tank stay

17. Remove the cylinder bolt (22).
18. Remove the cylinder head bolts, washers (23) and cylinder head (24).

Loosen the bolts in a crisscross pattern in two or three steps.

**NOTICE**

*Do not let the washers and cam chain fall into the crankcase.*

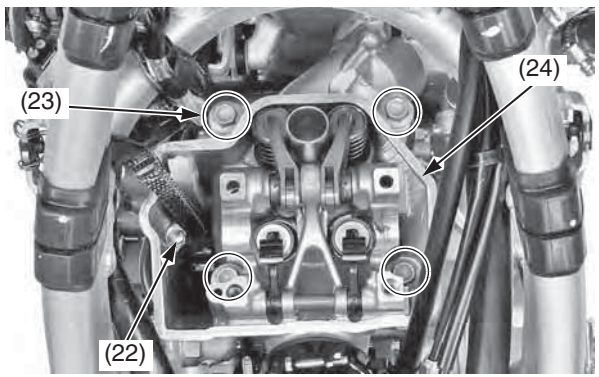


(22) cylinder bolt
(23) cylinder head bolts and washers
(24) cylinder head

19. Remove the dowel pins (25) and cylinder head gasket (26).

**NOTICE**

*Do not let the dowel pins and cam chain fall into the crankcase.*

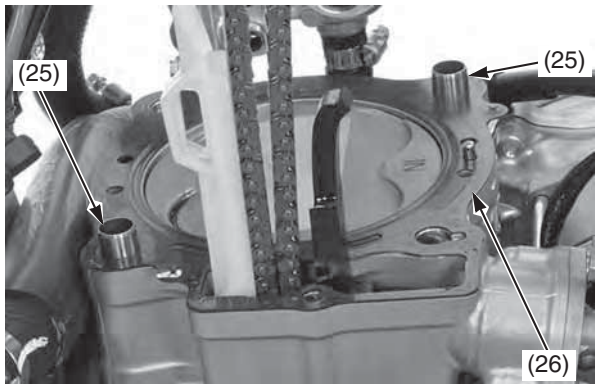


(25) dowel pins
(26) cylinder head gasket

20. Remove the cam chain guide (27) from the cylinder (28).

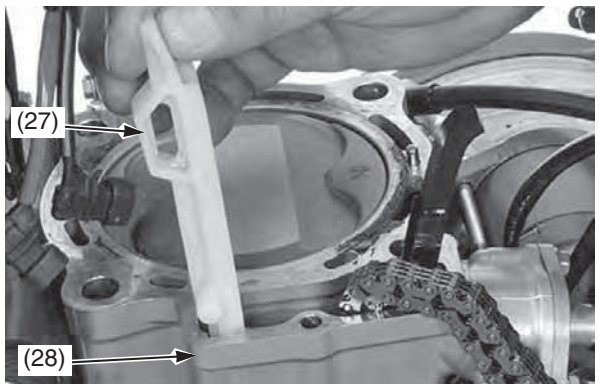


(27) cam chain guide
(28) cylinder

## Cylinder Removal

1. Remove the cylinder (1) while holding the piston (2).

**NOTICE**

*Do not let the cam chain fall into the crankcase. Do not pry on or strike the cylinder.*

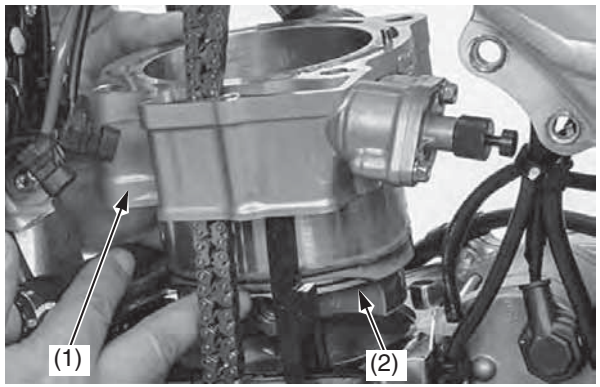


(1) cylinder (2) piston

2. Remove the dowel pins (3) and cylinder gasket (4).

**NOTICE**

*Do not let the cam chain fall into the crankcase. Do not let the dowel pins fall into the crankcase.*

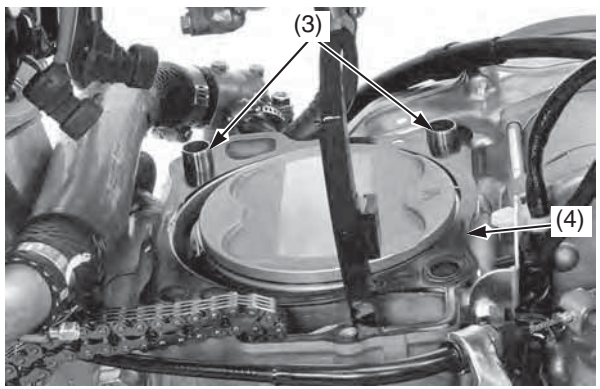


(3) dowel pins (4) cylinder gasket

## Piston Removal

1. Place clean shop towels (1) in the crankcase to keep the piston pin clips, or other parts, from falling into the crankcase.
2. Remove the piston pin clips (2) using a pair of needle-nose pliers.
3. Press the piston pin (3) out of the piston (4), and remove the piston.

Under racing conditions, the piston, rings and piston pin should be replaced every 4 races or about every 15.0 hours of running.

**NOTICE**

*Be careful not to damage or shock the piston pin. Do not clean the piston pin using a commercially available compound cleaner.*

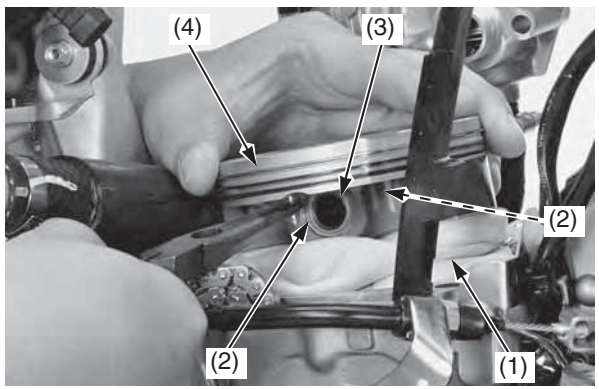


(1) shop towels (3) piston pin
(2) piston pin clips (4) piston

## Piston Ring Removal

Spread each piston ring (1) and remove by lifting it up at a point just opposite the gap.

**NOTICE**

*Do not damage the piston ring by spreading the ends too far.*

(1) piston ring

## Piston/Piston Pin/Piston Ring Inspection

We recommend you consult an official Honda Service Manual or your dealer for correct Service Limit measurements.

## Piston Ring Installation

1. Remove the carbon deposits from the piston head and piston ring grooves.

**NOTICE**

*Do not damage the piston when removing the carbon deposit.*

2. Apply engine oil to each piston ring whole surface.
3. Install the spacer (1) first, then install the side rails (2) to the piston (3).
4. Install the second ring (4) to the piston with "RN" mark (5) side facing up.
5. Install the top ring (6) to the piston with “1R” mark (7) side facing up.

**NOTICE**

*Do not damage the piston ring by spreading the ends too far.*
*Do not damage the piston during piston ring installation.*

6. After installing the piston rings they should rotate freely, without sticking. Space the ring end gaps 120 degrees apart between top ring, second ring and spacer. Space each ring end gap 0.8 in (20 mm) or more apart between upper side rail, spacer and lower side rail as shown.

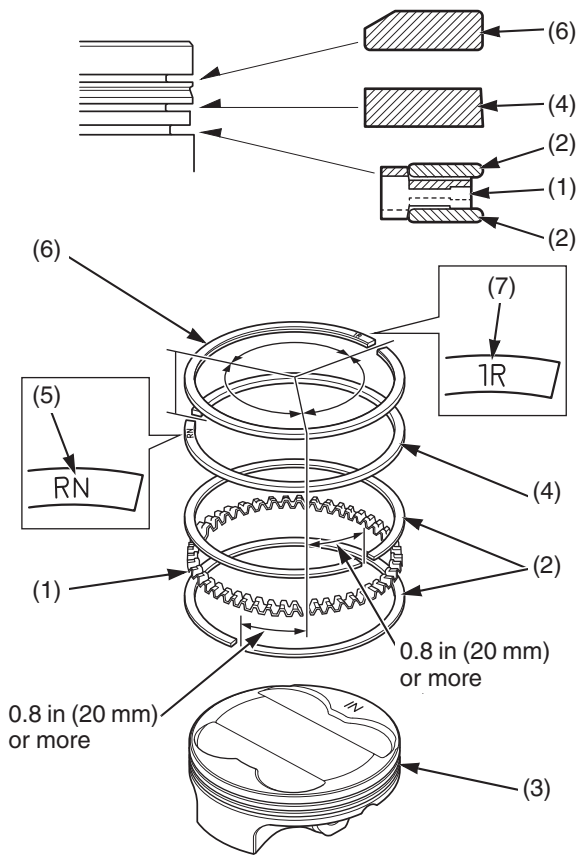


(1) spacer
(2) side rails
(3) piston
(4) second ring
(5) “RN” mark
(6) top ring
(7) "1R" mark

## Piston Installation

1. Place clean shop towels (1) over the crankcase opening to keep the piston pin clips from falling into the crankcase.
2. Apply molybdenum disulfide oil (a mixture of 1/2 engine oil and 1/2 molybdenum disulfide grease containing more than 3% molybdenum disulfide additive Moly Paste 77) to the connecting rod small end (2) inner surface.

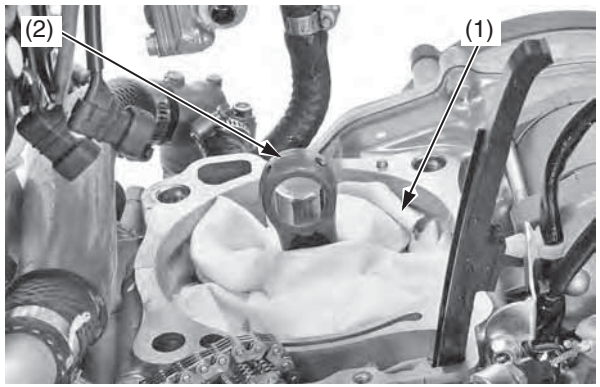


(1) shop towels
(2) connecting rod small end

3. Install the piston (3) with the "IN" mark (4) and/or the large valve recesses (5) facing the intake side of the engine.

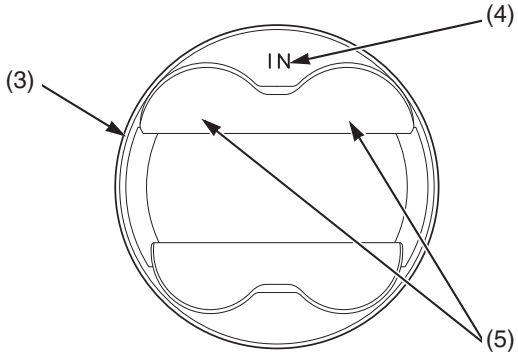


(3) piston
(4) "IN" mark
(5) large valve recesses

Apply molybdenum disulfide oil (a mixture of 1/2 engine oil and 1/2 molybdenum disulfide grease containing more than 3% molybdenum disulfide additive Moly Paste 77) to the piston pin (6) outer surface. Apply engine oil to the piston outer surface and piston pin hole inner surface. Install the piston pin and new piston pin clips (7).

**NOTICE**

*Be careful not to damage or shock the piston pin.*
*Use new pin clips. Never reuse old clips.*
*Do not let the clips fall into the crankcase.*
*Do not align the piston pin clip end gap with the piston cutout (8).*

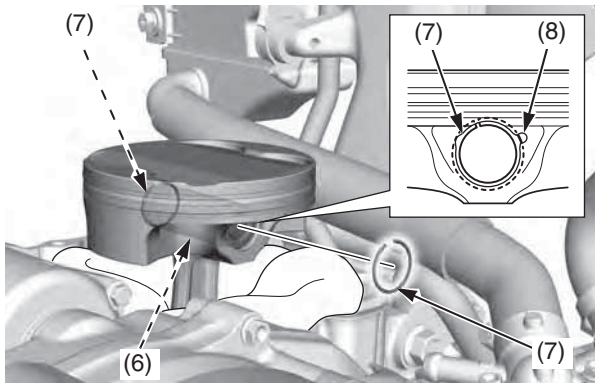


(6) piston pin
(7) piston pin clips (new)
(8) piston cutout

## Cylinder Installation

1. Clean the cylinder mating surfaces (1) of the crankcase, being careful not to let any material fall into the crankcase.
2. Remove the shop towels.
3. Apply liquid sealant (TB1141G manufactured by ThreeBond or equivalent) to the cylinder mating surface of the crankcase side as shown.

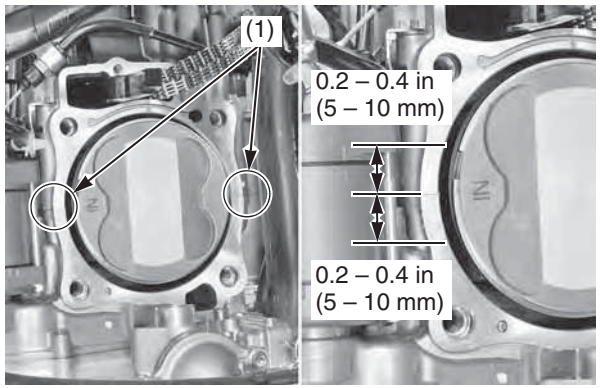


(1) cylinder mating surface

4. Install the dowel pins (2) and a new cylinder gasket (3).

**NOTICE**

*Do not let the dowel pins fall into the crankcase.*

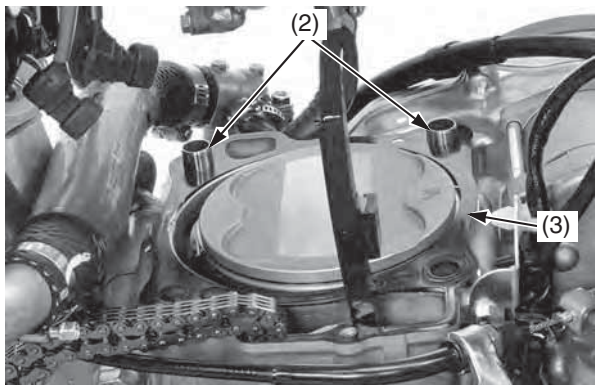


(2) dowel pins (3) cylinder gasket (new)

5. Apply engine oil to the cylinder bore (4), piston outer surface and piston rings (5). Route the cam chain (6) through the cylinder. Install the cylinder over the piston rings by hand while compressing the piston rings.

**NOTICE**

*Do not damage the piston rings and cylinder bore. Do not let the cam chain fall into the crankcase.*

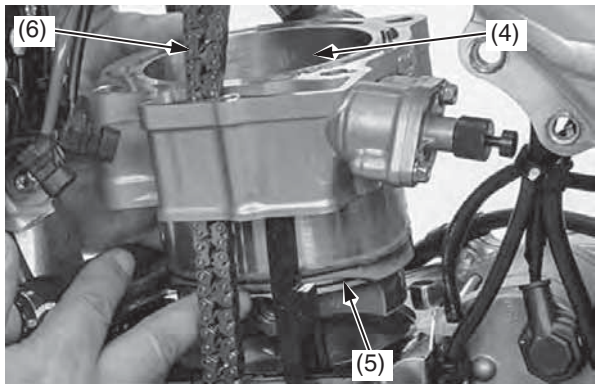


(4) cylinder bore (6) cam chain
(5) piston rings

## Cylinder Head Installation

1. Clean any gasket material off cylinder head.
2. Install the cam chain guide (1) and fit the cam chain guide tabs (2) in the cylinder cutouts (3). Push the guide until it bottoms in the crankcase guide groove.

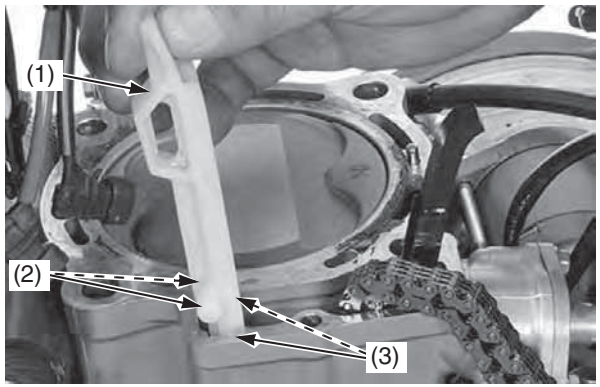


(1) cam chain guide
(2) cam chain guide tabs
(3) cylinder cutouts

3. Install the dowel pins (4) and a new cylinder head gasket (5).

**NOTICE**

*Do not let the dowel pins fall into the crankcase.*

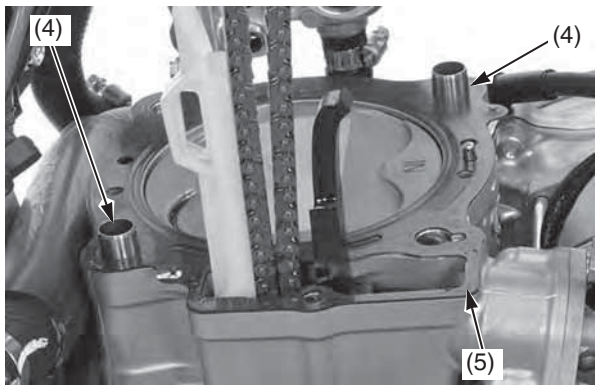


(4) dowel pins
(5) cylinder head gasket (new)

4. Route the cam chain through the cylinder head and install the cylinder head (6).

**NOTICE**

*Do not damage mating surfaces when installing the cylinder head.*

5. Apply engine oil to all cylinder head bolt threads and seating surface.
   Install the washers and cylinder head bolts (7) and tighten them to the specified torque in a crisscross pattern in two or three steps:
   37 lbf·ft (50 N·m, 5.1 kgf·m)

**NOTICE**

*Do not let the washers fall into the crankcase.*

6. Install the cylinder bolt (8) and tighten it to the specified torque:
   7 lbf·ft (10 N·m, 1.0 kgf·m)

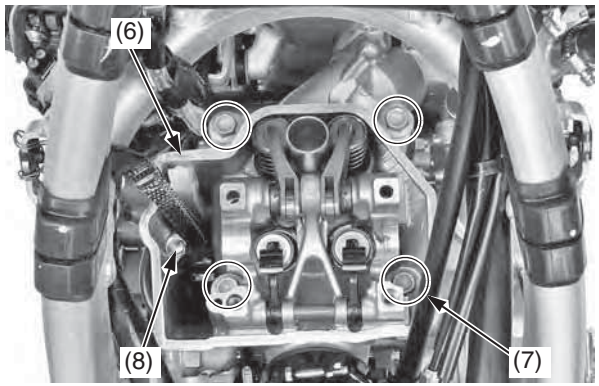


(6) cylinder head
(7) washers and cylinder head bolts
(8) cylinder bolt

7. Install the oil catch tank stay (9), collar (10), oil catch tank (11) to the cylinder head (6), and then tighten the mounting bolt (12).

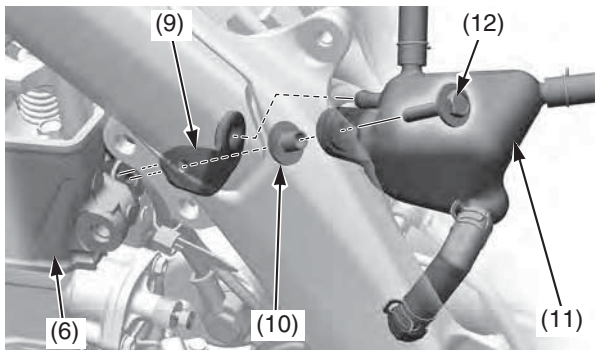


(6) cylinder head
(9) oil catch tank stay
(10) collar
(11) oil catch tank
(12) mounting bolt

8. Install the left cylinder head hanger plate (13) and right cylinder head hanger plate (14), then loosely install the cylinder head hanger plate bolts (15) and cylinder head hanger bolts (16). Tighten the cylinder head hanger bolts and cylinder head hanger plate bolts to the specified torque.
   cylinder head hanger bolts:
   **40 lbf·ft (54 N·m, 5.5 kgf·m)**
   cylinder head hanger plate bolts:
   **24 lbf·ft (32 N·m, 3.3 kgf·m)**

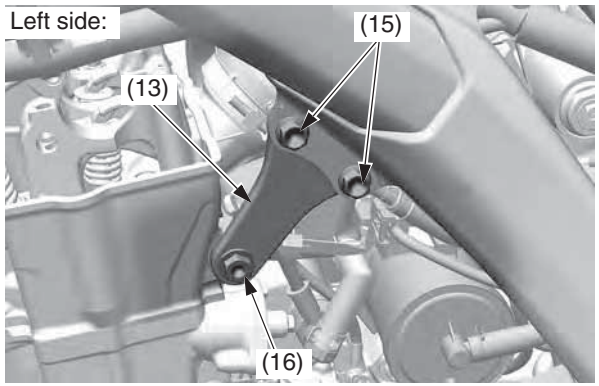


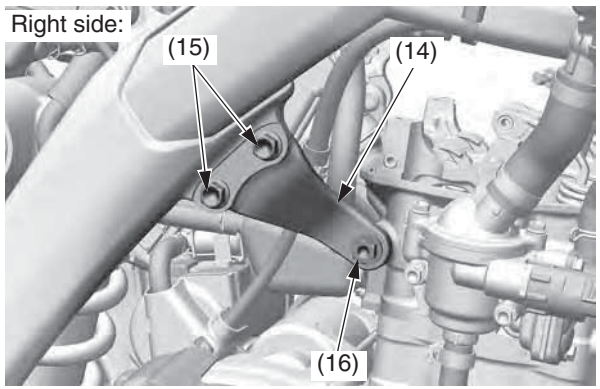


(13) left cylinder head hanger plate
(14) right cylinder head hanger plate
(15) cylinder head hanger plate bolts
(16) cylinder head hanger bolts

9. Install the throttle body (17) to the insulator (18) by aligning the tab of the throttle body with the groove of the insulator and tighten the insulator band screw (19) so the distance between the band ends is 0.43 ± 0.04 in (11.0 ± 1.0 mm).
10. Connect the vacuum tube (20) to the insulator.

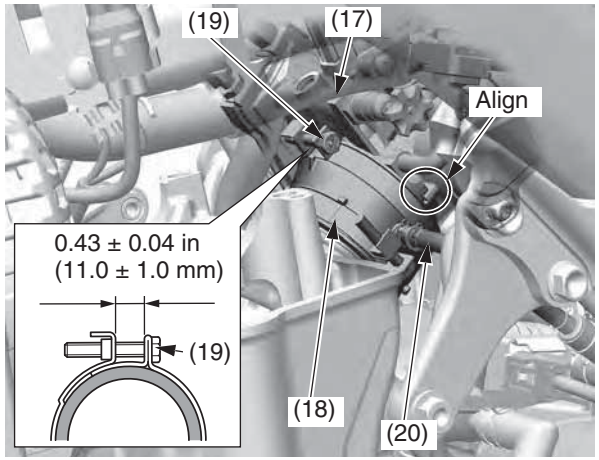


(17) throttle body
(18) insulator
(19) insulator band screw
(20) vacuum tube

11. Install and tighten the right radiator lower mounting bolt (21) and washer (22) securely.

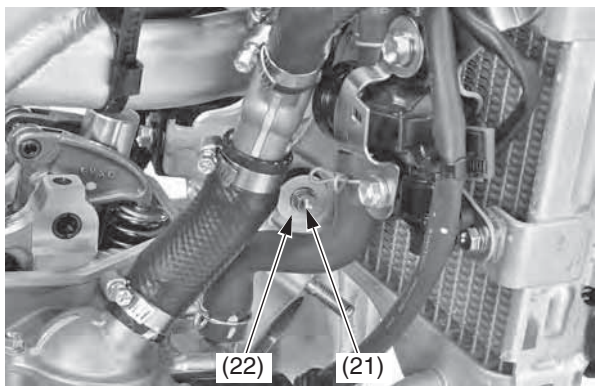


(21) right radiator lower mounting bolt
(22) washer

12. Install the new O-rings (23) onto the thermostat case dowel pin (24).

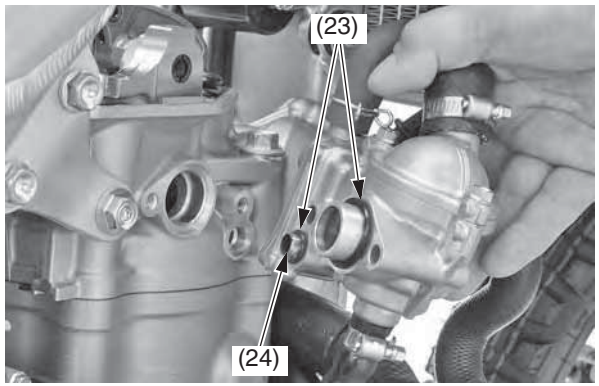


(23) O-rings (new)
(24) dowel pin

13. Install the thermostat case assembly (25) to the cylinder head (26), then install and tighten the mounting bolts (27) to the specified torque:
    **7 lbf·ft (10 N·m, 1.0 kgf·m)**

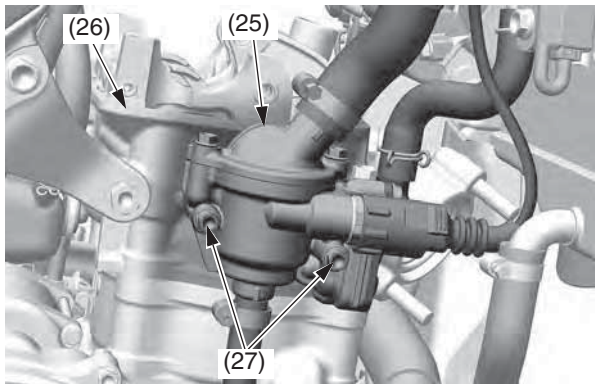


(25) thermostat case assembly
(26) cylinder head
(27) bolts

(cont'd)

14. Install the ignition coil (28) and tighten the ignition coil bolts (29) to the specified torque:
    7 lbf·ft (10 N·m, 1.0 kgf·m)
    Connect the ignition coil A connector (30) and B connector (31).

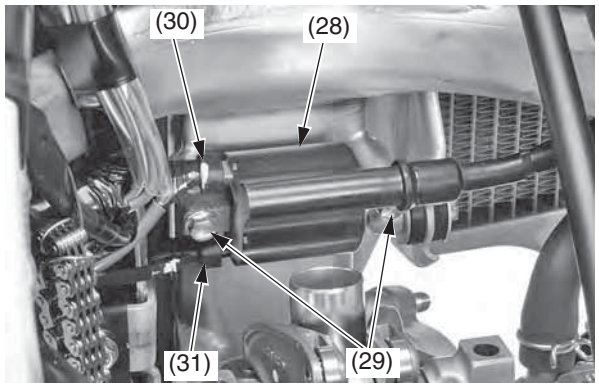


(28) ignition coil
(29) ignition coil bolts
(30) ignition coil A connector
(31) ignition coil B connector

15. Install the shims, camshaft and camshaft holder (page 86).
16. Install the crankshaft hole cap (page 88).
17. Install the cylinder head cover (page 89).
18. Install the spark plug (page 80).
19. Install the exhaust pipe (page 128).
20. Install the subframe (page 51) and muffler (page 127).
21. Install the fuel tank and seat (pages 43, 47).
22. Fill and bleed the cooling system (page 159).
    Check for the following:
    – compression leaks
    – abnormal engine noise
    – secondary air leaks
    – exhaust gas leaks
    – coolant leaks
    – oil leaks

Refer to *Important Safety Precautions* on page 31.

Loose, worn, or damaged suspension components may adversely affect the handling and stability of your CRF. If any suspension components appear worn or damaged, see your dealer for further inspection. Your dealer is qualified to determine whether or not replacement parts or repairs are needed.

## Front Suspension Inspection

- When your CRF is new, break it in for approximately 1 hour to ensure that the suspension has worked in (page 27).
- After break-in, test run your CRF with the front suspension at the standard setting before attempting any adjustments.
- For optimum fork performance, we recommend that you disassemble and clean the fork after riding your CRF for 3 hours. See page 100 for front suspension removal.
- Replace the fork oil every 6 races or 22.5 hours of running. See page 103 for oil capacity adjustment after changing the fork oil.
- Replace the damper oil every 6 races or 22.5 hours of running. See page 109 for damper fork oil replacement.
- Use Pro Honda HP Fork Oil, SS-19 or an equivalent which contains special additives to assure maximum performance of your CRF's front suspension.
  Periodically check and clean all front suspension parts to assure top performance. Check the dust seals for dust, dirt, and foreign materials. Check the oil for any contamination.
- Refer to *Suspension Adjustment Guidelines* (page 149). Make all rebound and compression damping adjustments in one-click increments. (Adjusting two or more clicks at a time may cause you to pass over the best adjustment.) Test ride after each adjustment.
- If you become confused about adjustment settings, return to the standard position and start over.
- If the fork is still too stiff/soft after adjusting compression damping, determine which portion of the travel is still too stiff/soft. This is an important step that will help you solve suspension problems.

1. Make sure that the fork protectors (1) and dust seals (2) are clean and not packed with mud and dirt.
2. Check for signs of oil leakage. Damaged or leaking fork seals should be replaced before your CRF is ridden.

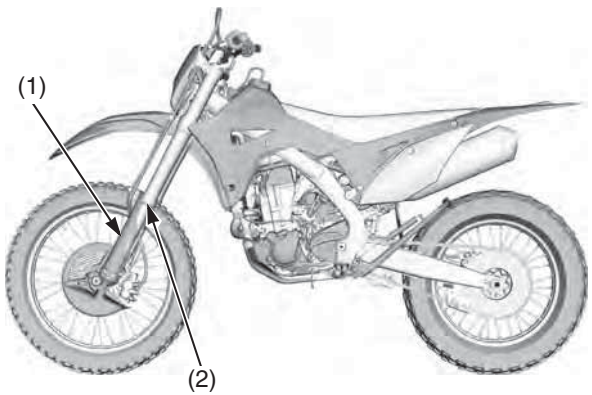


(1) fork protectors (2) dust seals

3. Inspect the wear rings (3) for wear or damage. Replace the wear ring if it is 0.06 in (1.5 mm) or flush with the outer tube (4). Remove the fork leg when replacing the wear ring.
   Install the wear ring with its end gap (5) facing rearward.

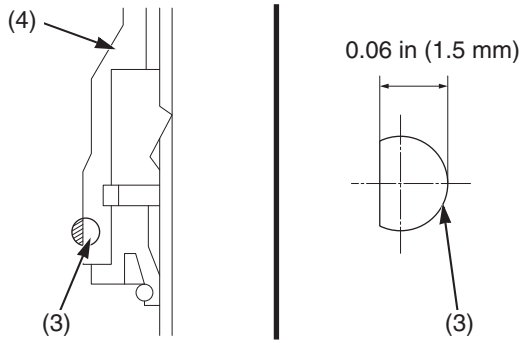


(3) wear rings (4) outer tube

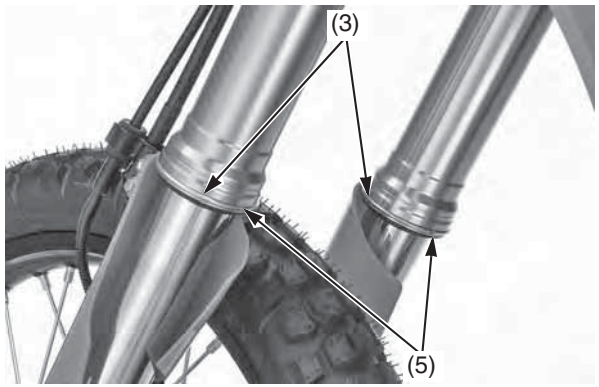


(3) wear rings (5) end gaps

(cont'd)

4. Make a quick check of fork operation by locking the front brake and pushing down on the handlebar several times.

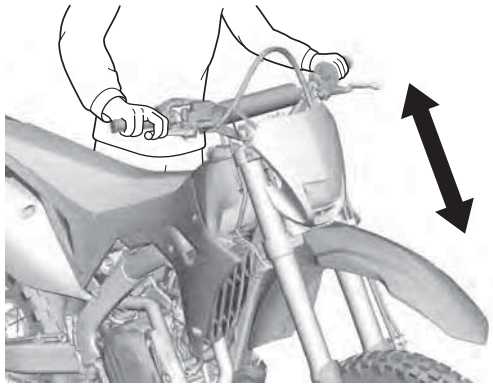

## Front Suspension Removal

- When removing the wheel, be careful not to damage the wheel speed sensor and pulser ring.
- When disassembling the fork, turn the compression (1) and rebound (2) damping adjusters counterclockwise to the softest position to prevent damaging the adjustment needle (be sure to record the number of turns from the starting position).

(1) compression damping adjuster
(2) rebound damping adjuster

1. Place your CRF on an optional workstand or equivalent support with the front wheel off the ground.
2. Remove the handlebar lower holder nuts, washers, mounting rubbers (3) and handlebar (4).

**NOTICE**

*Keep the master cylinder upright to prevent air from entering system.*

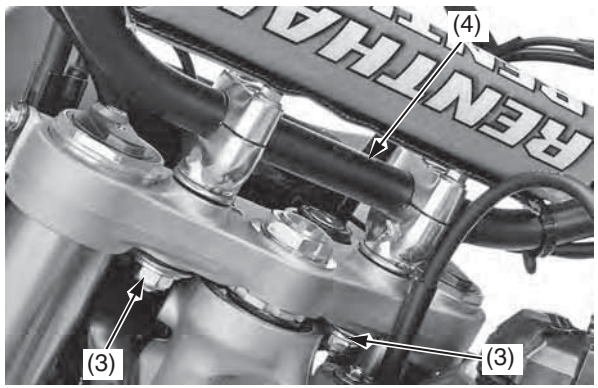


(3) handlebar lower holder nuts, washers and mounting rubbers
(4) handlebar

3. Loosen the fork bridge upper pinch bolts (5).
4. Loosen the fork bolts assembly (6), but do not remove them yet.

5. Loosen the fork damper assembly (7) using the lock nut wrench (8), but do not remove them.
- Lock nut wrench 07WMA-KZ30100

**NOTICE**

*Do not use an adjustable wrench to loosen the fork damper: it may damage them.*

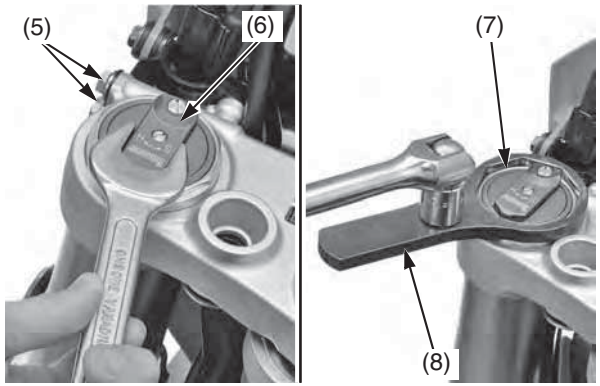


(5) fork bridge upper pinch bolts
(6) fork bolt assembly
(7) fork damper assembly
(8) lock nut wrench

6. Remove the disc cover (9) by removing disc cover socket bolts (10).

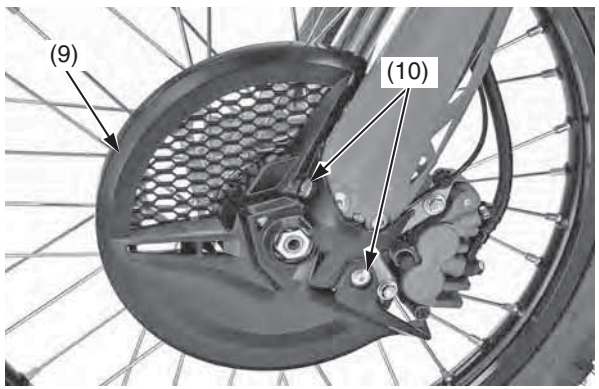


(9) disc cover (10) disc cover socket bolts

7. Remove the speed sensor wire guide plate screw (11) and guide plate (12).
Remove the speed sensor mounting bolt (13) and speed sensor (14).
8. Remove the front axle nut (15) and loosen the axle pinch bolts (16) on both forks.
Pull the front axle shaft (17) out of the wheel hub and remove the front wheel with collars (18).

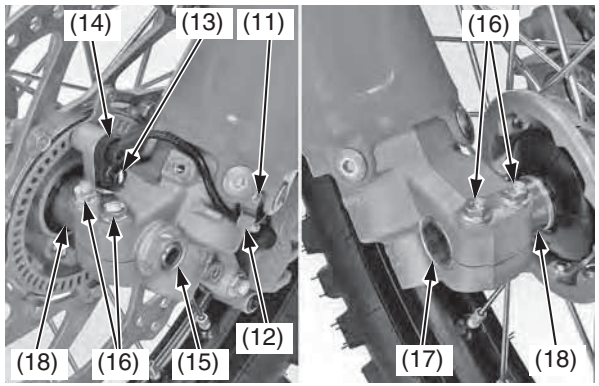


(11) screw
(12) guide plate
(13) bolt
(14) speed sensor
(15) front axle nut
(16) axle pinch bolts
(17) front axle shaft
(18) collars

9. Remove the brake hose/speed sensor wire clamp bolts (19), stay A (20) and stay B (21).
10. Remove the speed sensor wire clip (22) from the caliper bracket. Remove the front brake caliper mounting bolts (23) and brake caliper (24).
   - Do not support the brake caliper by the brake hose.
   - Do not operate the brake lever after the front wheel is removed. To do so will cause difficulty in fitting the brake disc between the brake pads.

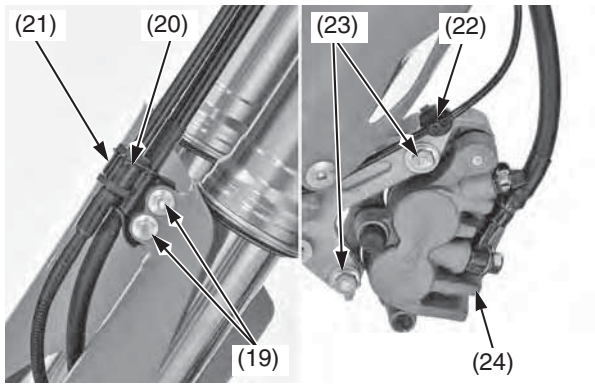


(19) brake hose/speed sensor wire clamp bolts
(20) stay A
(21) stay B
(22) wire clip
(23) front brake caliper mounting bolts
(24) brake caliper

11. Remove the fork protector socket bolts (25) and fork protectors (26).

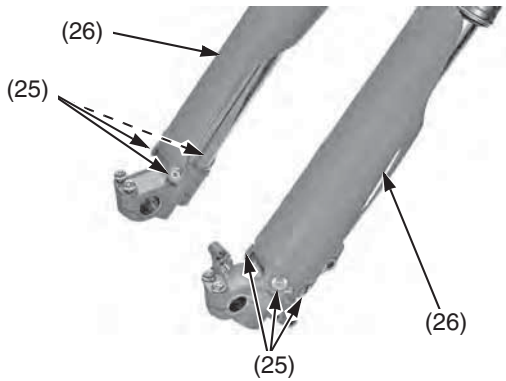


(25) fork protector socket bolts
(26) fork protectors

(cont'd)

12. Loosen the fork bridge lower pinch bolts (27), then pull the fork legs down and out.

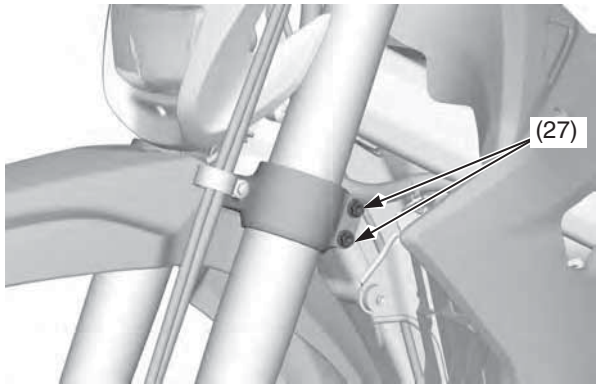


(27) fork bridge lower pinch bolts

13. Clean the fork assembly, especially the sliding surface (28) of the slider and fork dust seal (29).
14. Measure the length (30) between the axle holder and outer tube and record it before disassembling the fork.

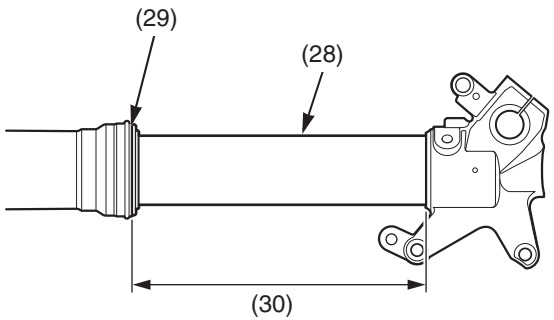


(28) sliding surface
(29) fork dust seal
(30) length

## Recommended Fork Oil

| | |
|---|---|
| suggested oil | Pro Honda HP Fork Oil, SS-19 |

## Fork Outer Tube Disassembly

Refer to *Front Suspension Removal* on page 100.

1. Clean the fork assembly, especially the sliding surface of the slider and dust seal.
2. Hold the outer tube (1), then remove the fork damper assembly (2) from the outer tube using the lock nut wrench (3). Gently slide the outer tube down onto the lower end (axle holder) (4).

• Lock nut wrench 07WMA-KZ30100

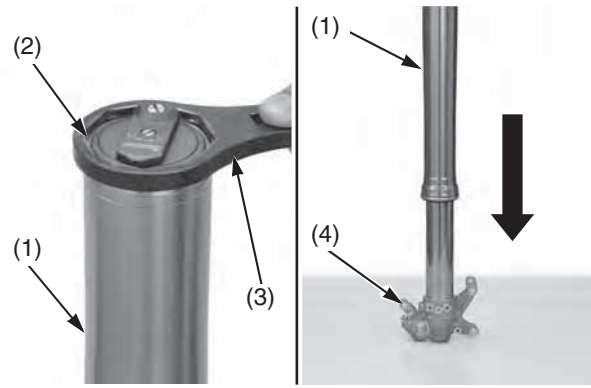


(1) outer tube
(2) fork damper assembly
(3) lock nut wrench
(4) axle holder

**NOTICE**

*The outer tube (1) can drop on the axle holder (4) and damage the fork dust seal (5). To avoid damage, hold both the outer tube and slider when removing the fork damper.*

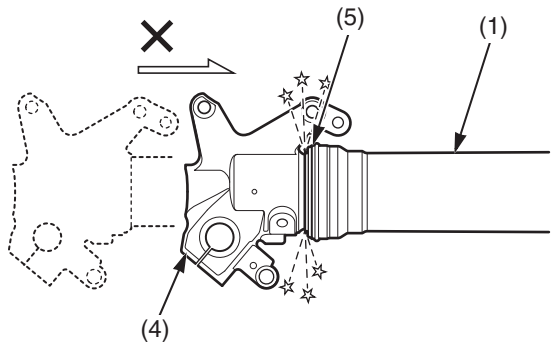


(1) outer tube
(4) axle holder
(5) fork dust seal

3. Drain the fork oil from the outer tube (1) and oil holes (6) of the fork damper assembly (2). Remove the O-ring (7) from the fork damper assembly.

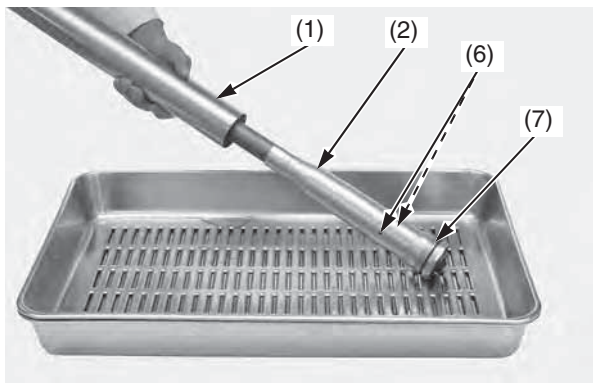


(1) outer tube
(2) fork damper assembly
(6) oil holes
(7) O-ring

4. Drain the fork oil by turning the outer tube (1) upside down. (About 0.46 US oz (13.7 cm³) of fork oil will be left in the outer tube when it is left inverted for about 20 minutes at 68°F/ 20°C.)

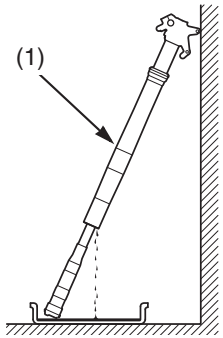


(1) outer tube

Pour the drained oil into a suitable container and dispose of it in an approved manner (page 160).

**NOTICE**

*Improper disposal of drained oil is harmful to the environment.*

Amount of fork oil left in the fork (within damper and spring) unit: cm³

| °C/°F \ minute | 5 | 10 | 20 | 35 | 55 | 85 | 145 |
|---|---|---|---|---|---|---|---|
| 30/86 | 16.5 | 14.1 | 12.7 | 11.8 | 11 | 10.1 | 8.6 |
| 20/68 | 17.4 | 15 | 13.7 | 12.6 | 11.5 | 10.5 | 9.1 |
| 10/50 | 18.9 | 16.5 | 14.8 | 13.7 | 12.5 | 11.4 | 9.8 |
| 0/32 | 20 | 18.4 | 15.9 | 14.5 | 13.7 | 13 | 11.7 |

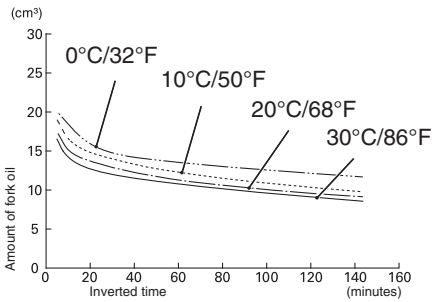


## Fork Oil Refilling

1. Pour the recommended fork oil into the outer tube (1).

Be sure the oil capacity is the same in both fork legs.

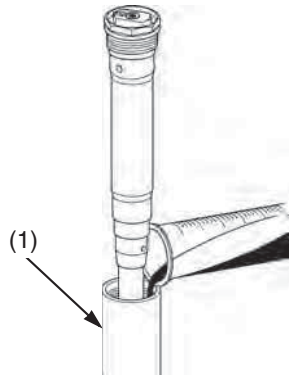


(1) outer tube

Recommended Oil:
Pro Honda HP Fork Oil, SS-19
Recommended Standard Amount:
12.2 US oz (361 cm³)

Fill the fork oil which is obtained by docking off the amount of the remaining oil in the fork from the recommended standard fork oil capacity.

Refer to *Front Suspension Adjustments* on page 140.

2. Apply the recommended fork oil to a new O-ring (2). Install the O-ring on the fork damper assembly (3).

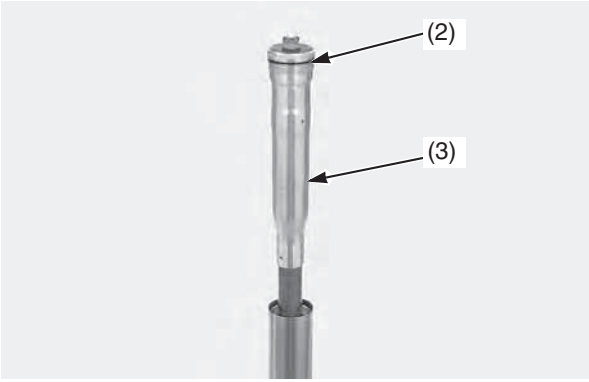


(2) O-ring (new) (3) fork damper assembly

3. Pull up the fork outer tube (1) slowly and temporarily tighten the fork damper assembly (3) using the lock nut wrench (4).

- Lock nut wrench 07WMA-KZ30100

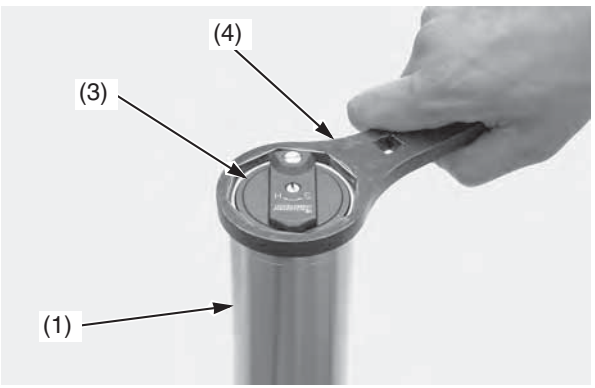


(1) outer tube (4) lock nut wrench
(3) fork damper assembly

## Front Suspension Installation

1. Insert both fork legs into the fork clamps. Tighten the fork bridge lower pinch bolts (1) to the specified torque:
   15 lbf·ft (20 N·m, 2.0 kgf·m)

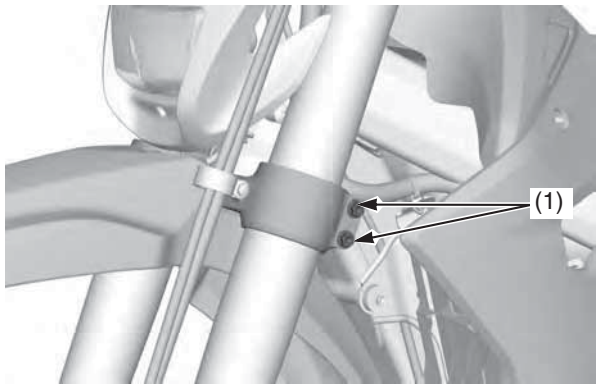


(1) fork bridge lower pinch bolts

2. Tighten the fork damper assembly (2) to the specified torque using the lock nut wrench (3):
   Actual:
   56 lbf·ft (76 N·m, 7.7 kgf·m)
   Torque wrench scale reading:
   51 lbf·ft (69 N·m, 7.0 kgf·m), using a 20 in (500 mm) long deflecting beam type torque wrench.

- Lock nut wrench 07WMA-KZ30100

When using the lock nut wrench, use a 20 in (500 mm) long deflecting beam type torque wrench. The lock nut wrench increases the torque wrench's leverage, so the torque wrench reading will be less than the torque actually applied to the fork damper assembly.

3. Tighten the fork bolt assembly (4) to the specified torque:
   22 lbf·ft (30 N·m, 3.1 kgf·m)

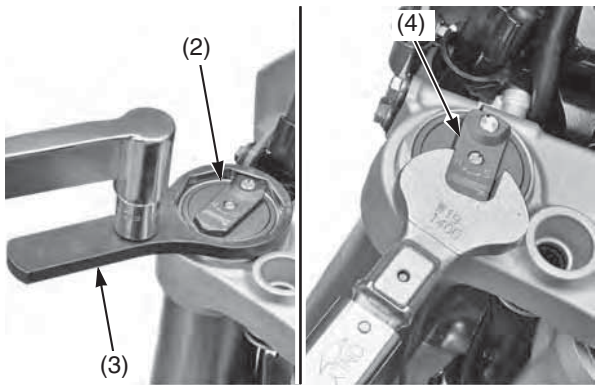


(2) fork damper assembly
(3) lock nut wrench
(4) fork bolt assembly

4. For ease of releasing air pressure after the forks are installed, loosen the fork bridge lower pinch bolts (1) and position the outer tubes so that the fork air pressure release screws (5) are in front of the compression damping adjuster (6).

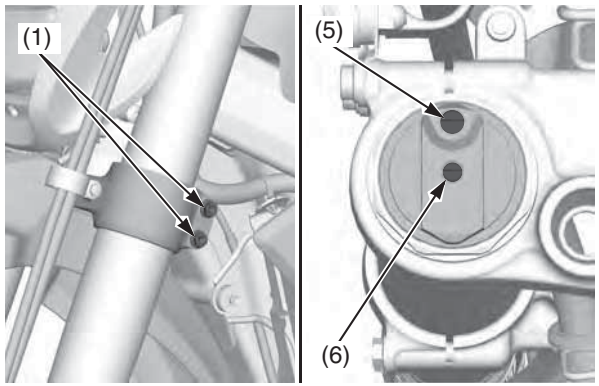


(1) fork bridge lower pinch bolts
(5) pressure release screw
(6) compression damping adjuster

5. Align the groove (7) in the outer tube with the top surface of the upper fork bridge (8).

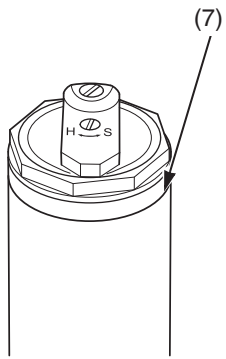


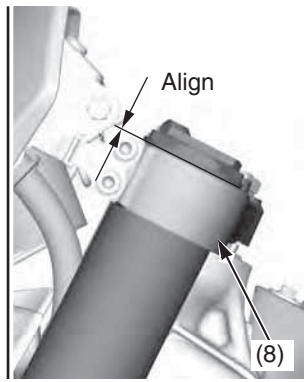


(7) groove (8) upper fork bridge

6. Tighten the fork bridge lower pinch bolts (1) to the specified torque:
   15 lbf·ft (20 N·m, 2.0 kgf·m)
7. Tighten the fork bridge upper pinch bolts (9) to the specified torque:
   16 lbf·ft (22 N·m, 2.2 kgf·m)

**NOTICE**

*Over-tightening the pinch bolts can deform the outer tubes. Deformed outer tubes must be replaced.*

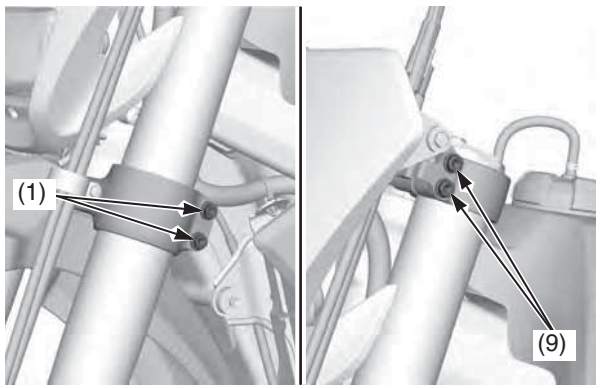


(1) fork bridge lower pinch bolts
(9) fork bridge upper pinch bolts

8. Clean the threads of the fork protector socket bolts (10) and axle holder thoroughly.
   Apply locking agent to the bolt threads.
   Install the fork protectors (11), fork protector socket bolts.
   Tighten the fork protector socket bolts to the specified torque:
   5.2 lbf·ft (7 N·m, 0.7 kgf·m)

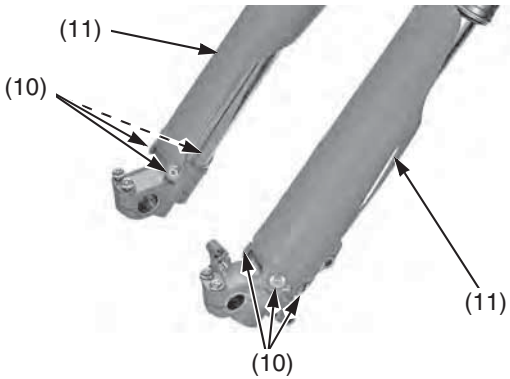


(10) fork protector socket bolts
(11) fork protectors

9. Align the brake caliper (12) and brake hose (13) with the left fork leg, making sure that the brake hose is not twisted. An improperly routed brake hose may rupture and cause a loss of braking efficiency.
10. Align the lower surface of the brake hose protector (14) with the lower ends of the stay A (15) and stay B (16), and assemble them. Install and tighten them to the left fork protector using the brake hose/speed sensor wire clamp bolts (17).
11. Clean the threads of the front brake caliper mounting bolts (18) and brake caliper thoroughly.
    Apply locking agent to the bolt threads.
    Install the brake caliper (12) on the slider and tighten the front brake caliper mounting bolts to the specified torque:
    22 lbf·ft (30 N·m, 3.1 kgf·m)
    Install the speed sensor wire clip (19) to the caliper bracket.

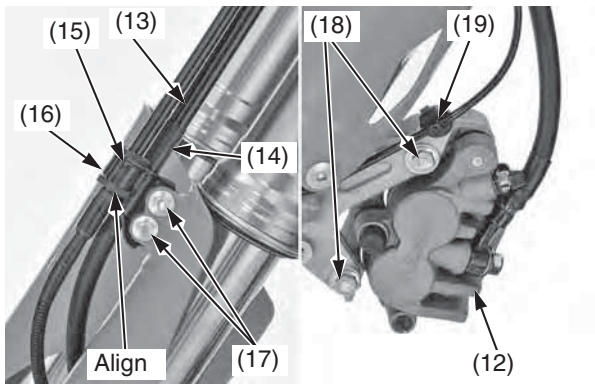


(12) brake caliper
(13) brake hose
(14) brake hose protector
(15) stay A
(16) stay B
(17) brake hose/speed sensor wire clamp bolts
(18) front brake caliper mounting bolts
(19) wire clip

(cont'd)

12. Clean the surfaces where the axle and axle clamps contact each other.
    Apply grease to each dust seal lips of the front wheel.
    Install the left side collar (20) and right side collar (21) into the wheel hub.

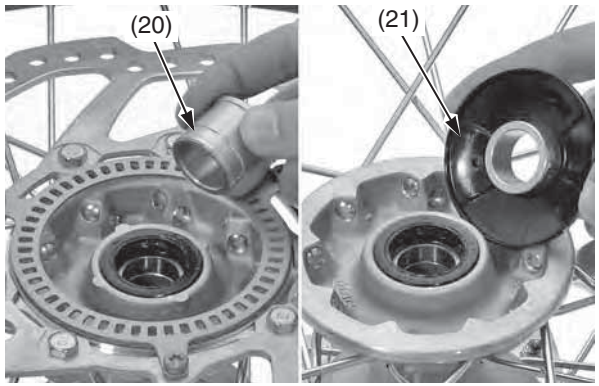


(20) left side collar (21) right side collar

13. Install the front wheel between the fork legs while inserting the disc between the pads, being careful not to damage the pads.
    - When installing the wheel, be careful not to damage the wheel speed sensor and pulser ring.
14. Insert the front axle shaft through the forks and wheel hub from the right side. Make sure that the front axle shaft is seated firmly onto the left fork leg clamp inner surface. Tighten the front axle nut (22) to the specified torque:
    65 lbf·ft (88 N·m, 9.0 kgf·m)
    Tighten the left axle pinch bolts (23) to the specified torque:
    15 lbf·ft (20 N·m, 2.0 kgf·m)
15. Route the speed sensor wire (24) properly and install the speed sensor (25) to the left fork bracket. Install and tighten the speed sensor mounting bolt (26).
    Install the speed sensor wire guide plate (27) and tighten the guide plate screw (28).

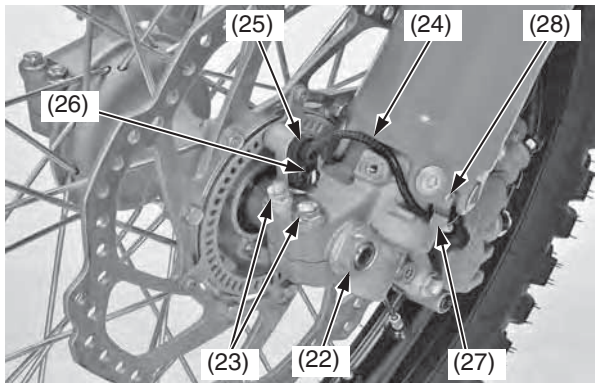


(22) front axle nut
(23) left axle pinch bolts
(24) speed sensor wire
(25) speed sensor
(26) bolt
(27) plate
(28) screw

16. Install the handlebar (29), mounting rubbers, washers and handlebar lower holder nuts (30) and tighten the handlebar holder nuts to the specified torque:
    32 lbf·ft (44 N·m, 4.5 kgf·m)

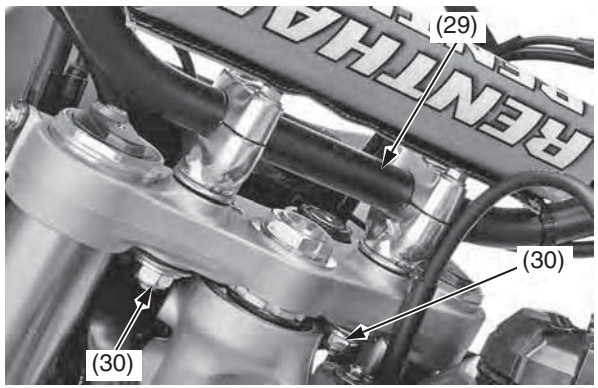


(29) handlebar
(30) mounting rubbers, washers and handlebar lower holder nuts

17. With the front brake applied, pump the fork up and down several times to seat the axle and check front brake operation.

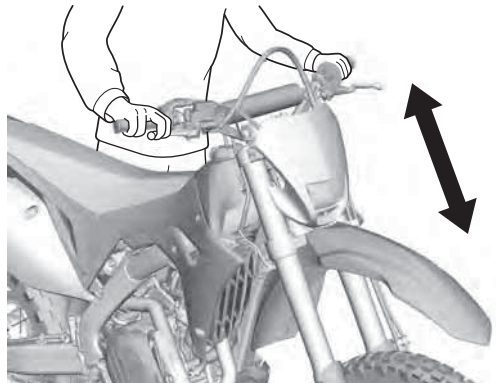

18. While keeping the forks parallel, alternately tighten the right axle pinch bolts (31) to the specified torque:
    15 lbf·ft (20 N·m, 2.0 kgf·m)

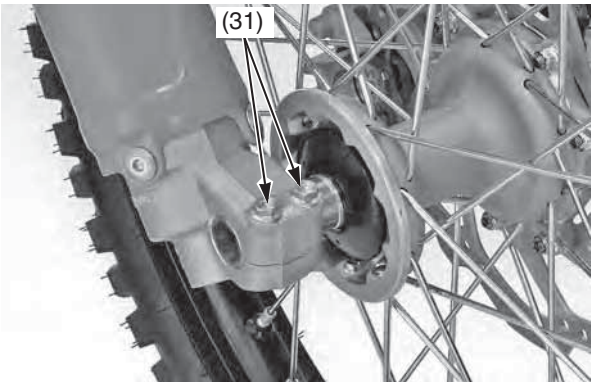


(31) right axle pinch bolts

**NOTICE**

*To avoid damage when torquing the axle pinch bolts, be sure the axle is seated firmly onto the left fork leg clamp inner surface.*

19. Install the disc cover (32) and tighten the disc cover socket bolts (33) to the specified torque:
    10 lbf·ft (13 N·m, 1.3 kgf·m)

**NOTICE**

*Do not ride with the disc cover removed. Doing so may damage the speed sensor wire.*

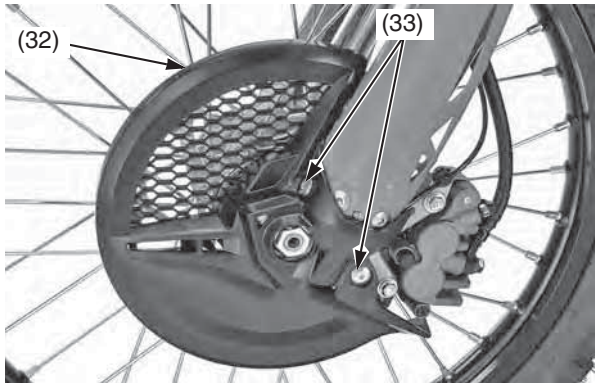


(32) disc cover (33) disc cover socket bolts

20. Turn the compression damping (34) and rebound damping (35) adjuster screws back to their original settings.

Refer to *Front Suspension Damping* on page 141.

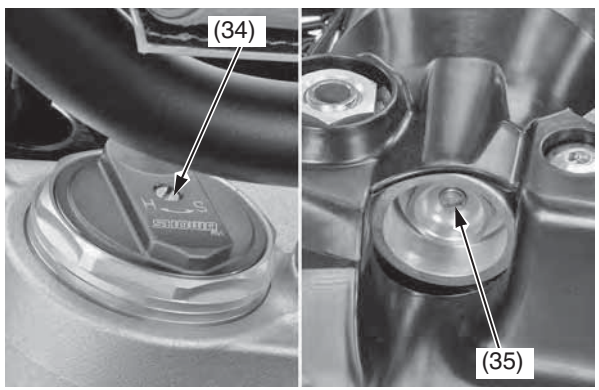


(34) compression damping adjuster
(35) rebound damping adjuster

## Fork Damper Disassembly

1. Remove the front suspension (page 100).
2. Disassemble the fork outer tube (page 102).
3. Place the lower end (axle holder) (1) of the slider in a vise with a piece of wood or soft jaws to avoid damage.

**NOTICE**

*Over-tightening the vise can damage the axle holder.*

4. Loosen the fork center bolt (2).

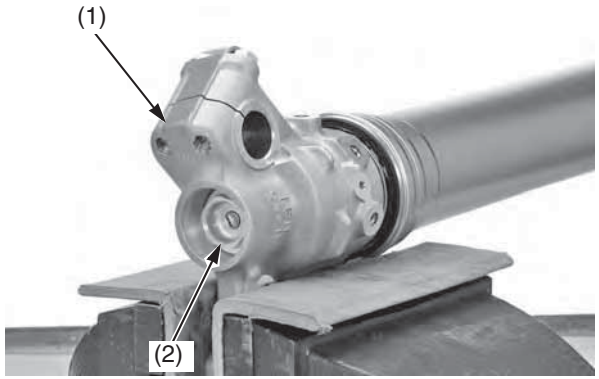


(1) axle holder (2) fork center bolt

5. Pull up the fork outer tube slowly and temporarily tighten the fork damper assembly (page 103). Push the outer tube until the fork center bolt lock nut (3) is fully exposed and install the piston base (4) or mechanic's stopper tool between the axle holder (1) and fork center bolt lock nut.

- Piston base 07958-2500001

(cont'd)

6. Make the mechanic's stopper tool out of a thin piece of steel (0.08 in (2.0 mm) thick) as shown if you do not have a special tool.

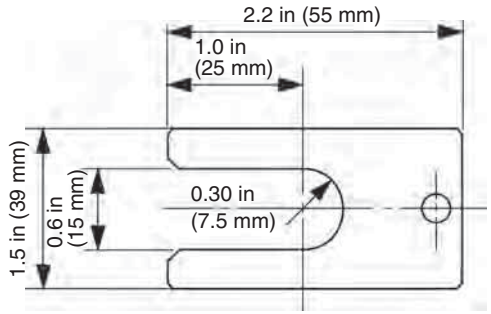


7. Hold the fork center bolt lock nut (3) and remove the fork center bolt (2) from the fork damper.

**NOTICE**

*Do not remove the lock nut from the fork damper piston rod. If the lock nut is removed, the piston rod will fall in the fork damper and you may not reassemble the fork damper.*

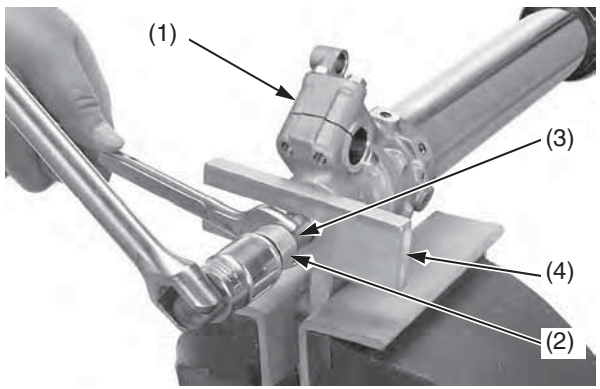


(1) axle holder
(2) fork center bolt
(3) fork center bolt lock nut
(4) piston base

8. Remove the push rod (5) from the fork damper.
9. Remove the piston base (4) or mechanic's stopper tool between the axle holder (1) and fork center bolt lock nut (3) while pushing the fork outer tube.

**NOTICE**

*Be careful not to damage the lock nut and fork center bolt hole.*

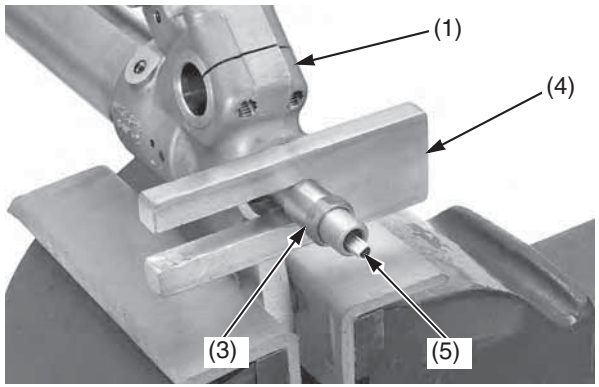


(1) axle holder
(3) fork center bolt lock nut
(4) piston base
(5) push rod

10. Remove the fork damper assembly (6) from the fork assembly (7).
    Remove the fork from the vise.
    Remove the fork spring (8), spring seat collar (9) and back-up ring/seat stopper (10) from the fork assembly.

**NOTICE**

*Do not attempt to separate the fork assembly and drop the axle holder out from the outer tube, which can damage the guide bushings (11).*
*To avoid damage, hold both the outer tube and slider.*

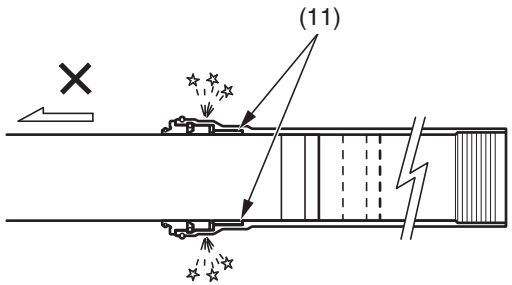


(11) guide bushing

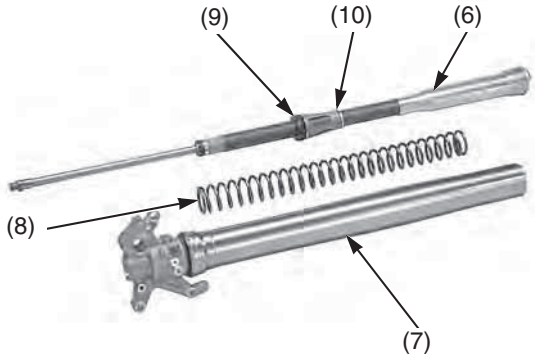


(6) fork damper assembly
(7) fork assembly
(8) fork spring
(9) spring seat collar
(10) back-up ring/seat stopper

## Damper Oil Change

1. Check the fork center bolt lock nut (1) is installed on the fork damper piston rod (2) properly.

**NOTICE**

*If the lock nut was removed, the piston rod will fall into the fork damper and you will not be able to reassemble the fork damper.*

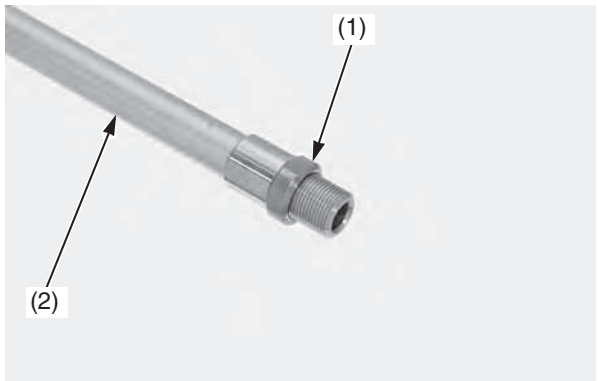


(1) fork center bolt lock nut
(2) fork damper piston rod

2. Loosen the fork bolt assembly (3) while holding the fork damper assembly (4).

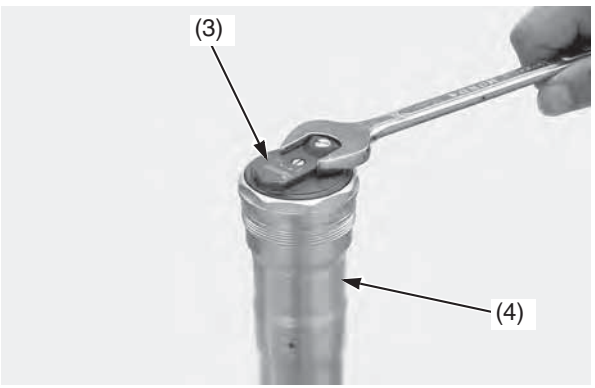


(3) fork bolt assembly (4) fork damper assembly

3. Remove the fork bolt assembly (3) from the fork damper threads and then pop it out by pumping the fork damper piston rod (2) slowly.
4. Remove the fork bolt assembly (3).

Be careful not to damage the fork bolt bushings. Do not disassemble the fork bolt assembly. Replace the fork bolt as an assembly if it is damaged.

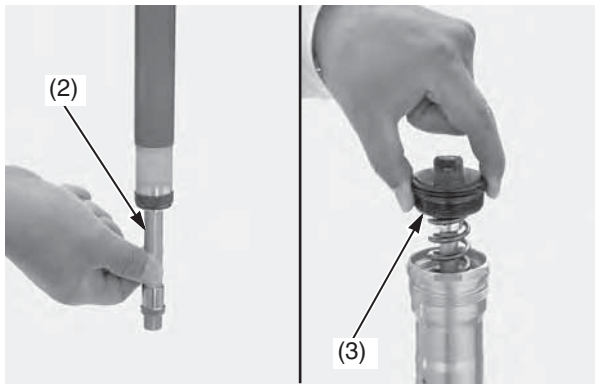


(2) fork damper piston rod (3) fork bolt assembly

5. Empty the fork oil from the fork damper assembly (4) by pumping the damper rod several times.

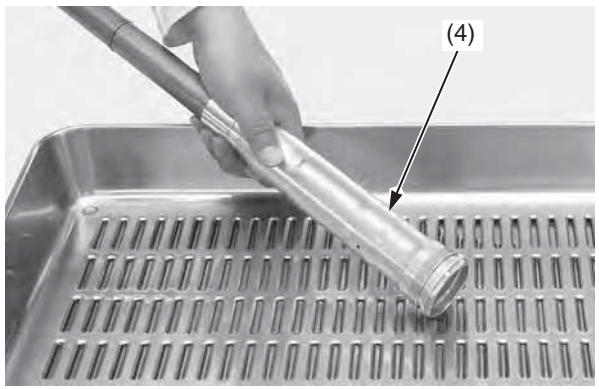


(4) fork damper assembly

6. Clean the fork bolt and fork damper assembly threads (5).

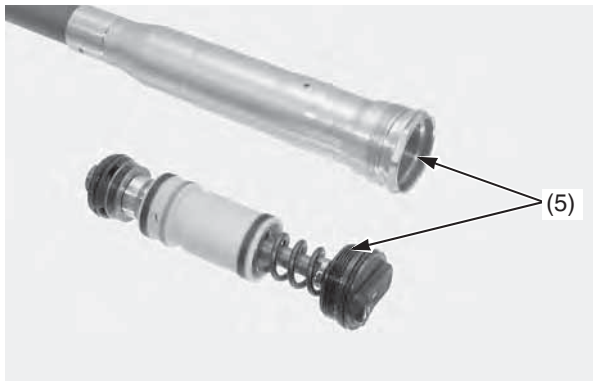


(5) fork bolt and fork damper assembly threads

7. Extend the fork damper piston rod to maximum length.
   Pour the recommended fork oil into the fork damper assembly (4).
   Recommended Oil:
   Pro Honda HP Fork Oil, SS-19
   Recommended Amount:
   8.4 US oz (248 $cm^3$)

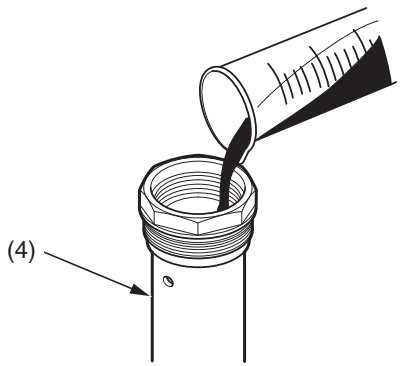


(4) fork damper assembly

(cont'd)

8. Pump the fork damper piston rod (2) slowly several times to bleed the air from the fork damper assembly (4).

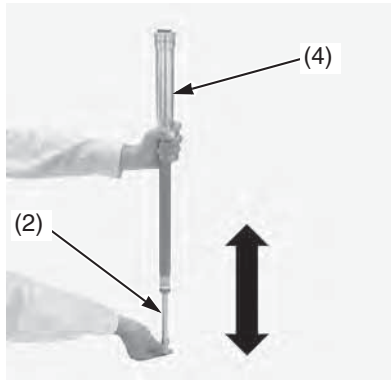


(2) fork damper piston rod
(4) fork damper assembly

9. Apply fork oil to the fork bolt bushings (6), new O-rings (7) and new piston ring (8) on the fork bolt assembly (3).

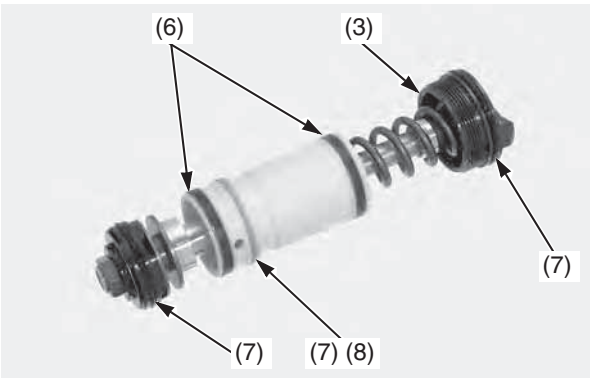


(3) fork bolt assembly
(6) fork bolt bushings
(7) O-rings (new)
(8) piston ring (new)

10. Cover the oil holes (9) of the fork damper assembly with a shop towel and compress the piston rod (2) all the way.
Pull the piston rod out 0.8 in (20 mm) and install the fork bolt assembly (3) into the fork damper assembly (4).
Push the fork bolt assembly in slowly while pulling the piston rod out.

**NOTICE**

*Be careful not to damage the fork bolt piston ring.*

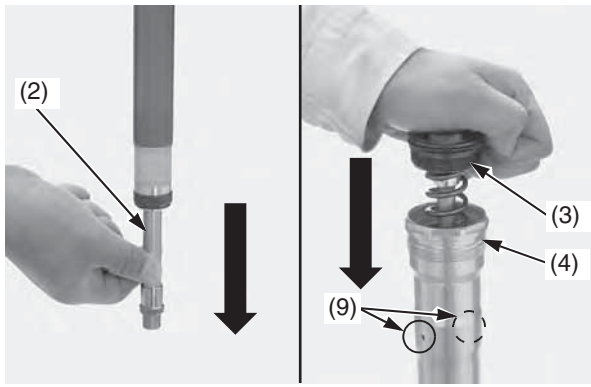


(2) fork damper piston rod
(3) fork bolt assembly
(4) fork damper assembly
(9) oil holes

11. Temporarily tighten the fork bolt assembly (3) to the fork damper assembly (4).

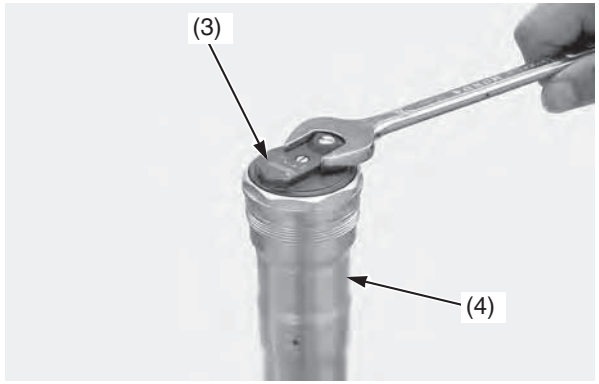


(3) fork bolt assembly
(4) fork damper assembly

12. Completely screw in the fork center bolt lock nut (1) to the fork damper piston rod (2).

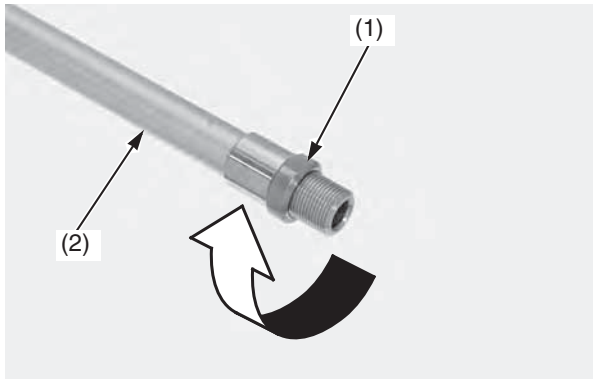


(1) fork center bolt lock nut
(2) fork damper piston rod

13. Check the fork damper piston rod sliding surface and threads for damage.

14. Hold the fork damper assembly (4) in an upright position and pump the fork damper piston rod (2) 3.9 in (100 mm) slowly, several times.

**NOTICE**

*Be careful not to bend or damage the fork damper piston rod when the piston rod is stroked.*

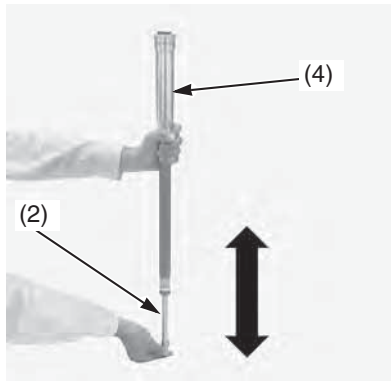


(2) fork damper piston rod (4) fork damper assembly

15. Cover the fork damper piston rod end with shop towel (10) to prevent fork damage. Cover the oil holes with shop towel to prevent blow out of fork oil.
Blow the extra oil off from the fork damper assembly (4) by pumping the fork damper piston rod to full stroke.

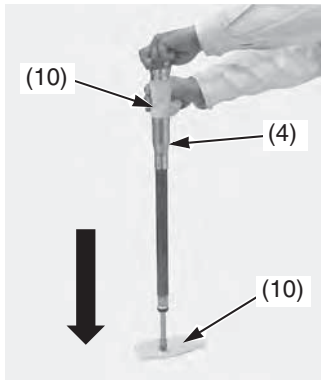


(4) fork damper assembly (10) shop towel

16. Drain the extra oil from the oil holes (9) of the fork damper assembly (4).

By doing above procedure, about 0.2 US oz (5 $cm^3$) of fork oil will be drained from the fork damper through the oil hole and cause 8.2 US oz (243 $cm^3$) of fork oil to be left in the fork damper assembly.

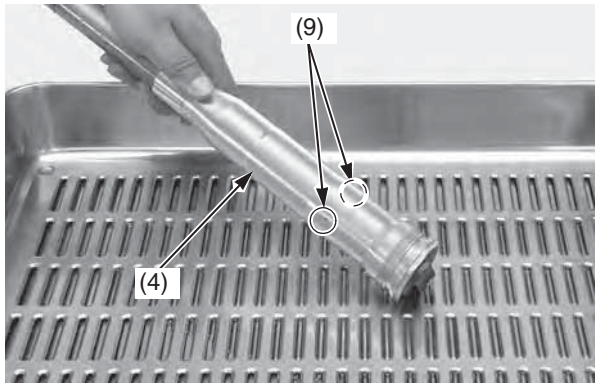


(4) fork damper assembly (9) oil holes

Pour the drained oil into a suitable container and dispose of it in an approved manner (page 160).

**NOTICE**

*Improper disposal of drained fluids is harmful to the environment.*

(cont'd)

17. Blow out any oil from the oil hole (9) of the fork damper assembly (4) using compressed air.
    Wipe off the oil completely from the fork damper.
18. If you cannot use compressed air, remove the fork air pressure release screws (11) from the fork bolt assembly.
    Hold the fork damper upside down for 20 minutes and drain the fork oil.
    Apply recommended fork oil to a new O-ring (12), and then install a new O-rings on the air pressure release screws (11).
    Tighten the air pressure release screws to the specified torque:
    1.0 lbf·ft (1.3 N·m, 0.1 kgf·m)

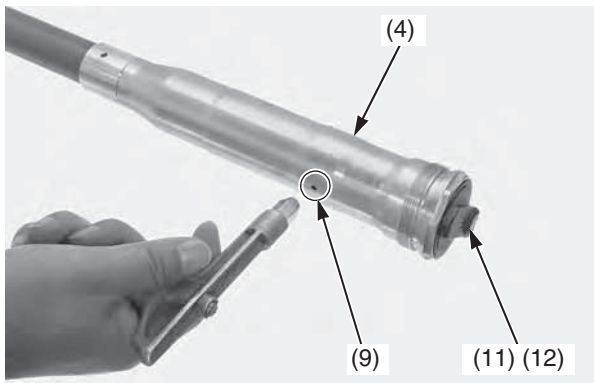


(4) fork damper assembly
(9) oil hole
(11) air pressure release screws
(12) O-rings (new)

19. Fully stroke the piston rod (2) by pushing down the fork damper assembly (4).
    Check the piston rod for smooth operation.
    If the piston rod operation is not smooth, check the piston rod for bends or damage.

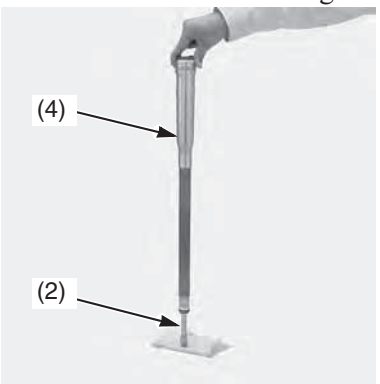


(2) fork damper piston rod
(4) fork damper assembly

## Fork Damper Installation

1. Drain the fork oil from the fork assembly (1) by placing it upside down.
   (About (0.2 US oz (5.4 cm³) of fork oil will be left in the fork assembly when it is left inverted for about 20 minutes at 20 °C/68 °F)

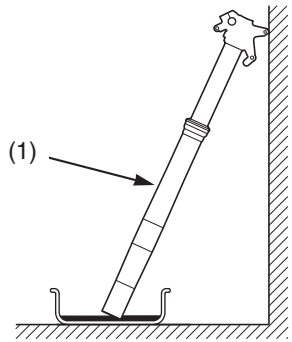


(1) fork assembly

To properly dispose of drained fluids, refer to *You & the Environment* on page 160.

**NOTICE**

*Improper disposal of drained fluids is harmful to the environment.*

Amount of fork oil left in the fork
(without damper and spring) unit: cm³

| minute / °C/°F | 5 | 10 | 20 | 35 | 55 | 85 | 145 |
|---|---|---|---|---|---|---|---|
| 30/86 | 6.5 | 5.7 | 5.2 | 4.5 | 4.1 | 3.7 | 3.3 |
| 20/68 | 6.7 | 6.2 | 5.4 | 4.7 | 4.4 | 3.8 | 3.5 |
| 10/50 | 7.3 | 6.4 | 5.6 | 5 | 4.6 | 4.2 | 3.8 |
| 0/32 | 8.6 | 8.2 | 7.9 | 7.6 | 7.3 | 6.8 | 6 |

2. Tighten the fork center bolt lock nut (2) fully and measure the thread length (A) as shown.
   Standard: 0.43 – 0.47 in (11 – 12 mm)
   Wipe the oil completely off the fork damper.

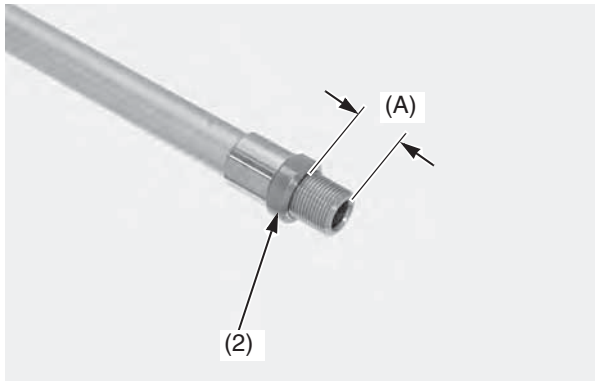


(2) fork center bolt lock nut (A) thread length

3. Apply recommended fork oil to the slider bushing (3).
   Install the seat stopper (4), back-up ring (5) and spring seat collar (6) to the fork damper (7).
   Make sure the black side of the back-up ring is seated on the seat stopper side.

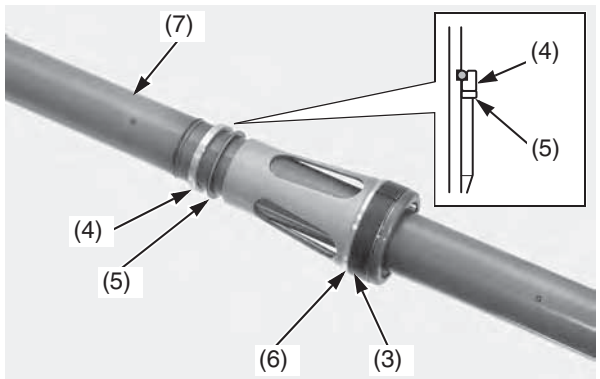


(3) slider bushing
(4) seat stopper
(5) back-up ring
(6) spring seat collar
(7) fork damper

4. Blow out the oil completely off the fork spring (8).
   Put the fork spring on the fork damper assembly (9).
   Install the spring/fork damper assembly into the fork assembly (1).

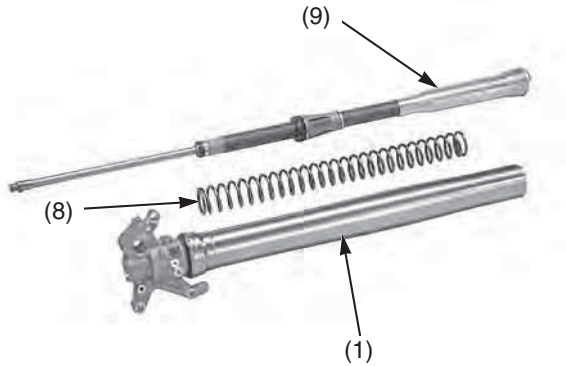


(1) fork assembly
(8) fork spring
(9) fork damper assembly

5. Temporarily tighten the fork damper assembly (9) to the outer tube (10) using the lock nut wrench (11).
- Lock nut wrench 07WMA-KZ30100

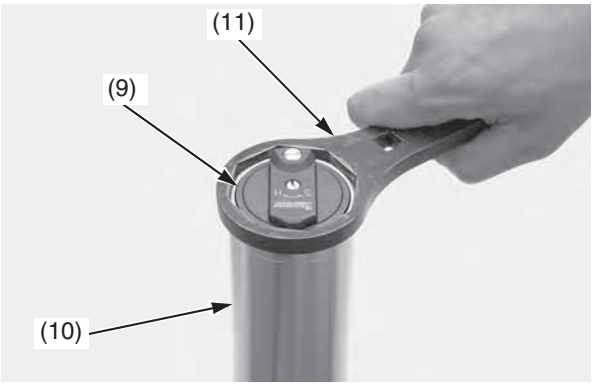


(9) fork damper assembly (11) lock nut wrench
(10) outer tube

6. Place the lower end (axle holder) (12) of the slider in a vise with a piece of wood or soft jaws to avoid to damage.

**NOTICE**

*Over-tightening the vise can damage the axle holder.*

7. Push the outer tube until the fork center bolt lock nut (2) is fully exposed and install the piston base (13) or mechanic's stopper tool between the axle holder (12) and fork center bolt lock nut.
   Measure the thread length again.
   Standard: 0.43 – 0.47 in (11 – 12 mm)
- Piston base 07958-2500001

(cont'd)

8. Install the push rod (14) into the piston rod (15) until it stops.

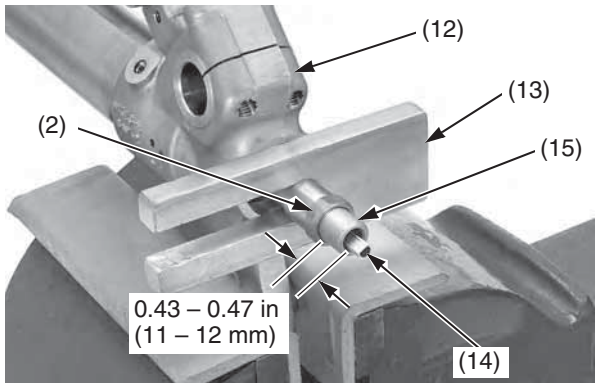


(2) fork center bolt lock nut
(12) axle holder
(13) piston base
(14) push rod
(15) piston rod

9. Apply fork oil to new O-ring (16) and install it to the fork center bolt (17).
   Install the fork center bolt to the fork damper piston rod (15) by aligning the each flat-side of the fork center bolt adjusting piston rod and push rod (14).
   Tighten the fork center bolt fully by hand.

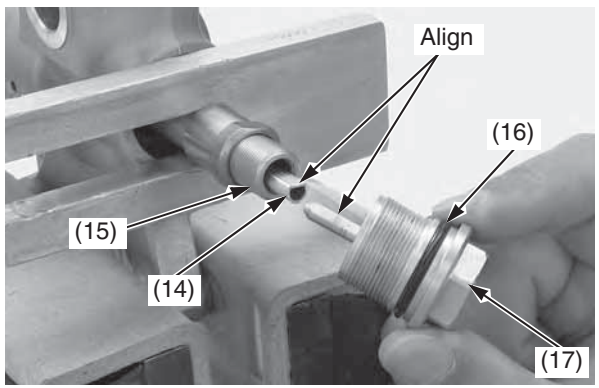


(14) push rod
(15) piston rod
(16) O-ring (new)
(17) fork center bolt

10. Measure the clearance between the fork center bolt lock nut (2) and fork center bolt (17).
    Standard: 0.04 – 0.08 in (1.0 – 2.0 mm)

If the clearance is out of specification, check the fork center bolt lock nut and fork center bolt installation.

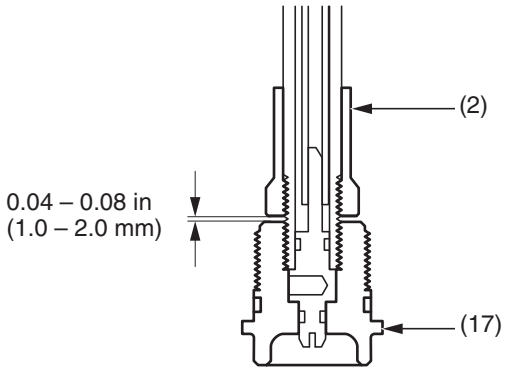


(2) fork center bolt lock nut (17) fork center bolt

11. Tighten the fork center bolt lock nut (2) to the fork center bolt (17) closely by hand. Tighten the fork center bolt lock nut to the specified torque:
    21 lbf·ft (28 N·m, 2.9 kgf·m)

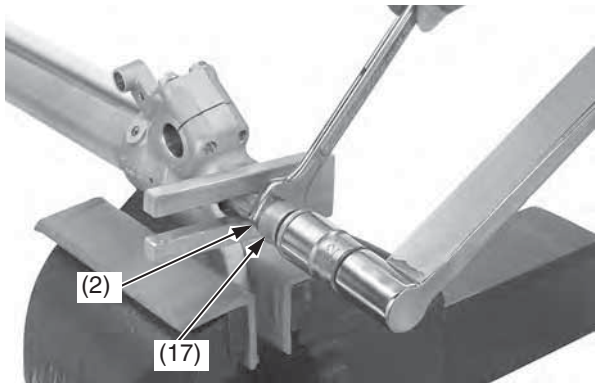


(2) fork center bolt lock nut
(17) fork center bolt

12. Apply locking agent to the fork center bolt threads.
    Remove the piston base or mechanic's stopper tool while pushing the fork damper.
    Install the fork center bolt (17) to the axle holder and tighten it to the specified torque:
    51 lbf·ft (69 N·m, 7.0 kgf·m)

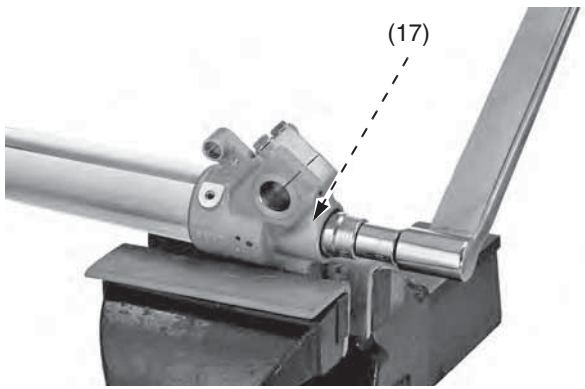


(17) fork center bolt

13. Remove the fork from the vice.
14. Measure the length between the axle holder and outer tube.
    Standard: 12.3 ± 0.1 in (312 ± 2 mm)
15. Compare the length (18) at assembly and at disassembly. They should be the same length.

If the length at assembly is longer than at disassembly, check the fork center bolt and fork center bolt lock nut installation.

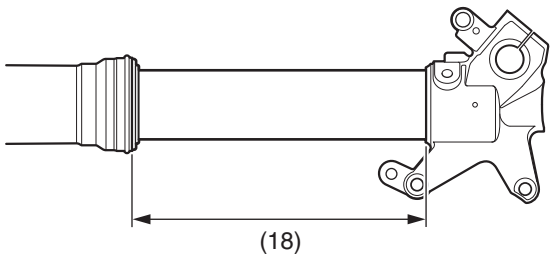


(18) length

16. Refilling the fork oil (page 103).
17. Install the front suspension (page 104).

## Rear Suspension Inspection

The swingarm is controlled by one hydraulic shock absorber with an aluminum reservoir for oil and nitrogen gas pressure. The gas pressure in the reservoir is contained within a rubber bladder.

The rear suspension's spring pre-load and damping adjustments (compression and rebound) should be adjusted for the rider's weight and track conditions (pages 146, 148, 151).

Do not attempt to disassemble, service, or dispose of the damper; see your dealer.
The instructions found in this owner's manual are limited to adjustments of the shock assembly only.

- When your CRF is new, break it in for approximately 1 hour with the standard suspension settings before attempting to adjust the rear suspension.
- Refer to *Suspension Adjustment Guidelines* (page 151) for making all rebound and compression damping adjustments in one click or 1/12 turn increments. (Adjusting two or more clicks or turns at a time may cause you to pass over the best adjustment.)
  Test ride after each adjustment.
- If the rear suspension is too stiff/soft, adjust it by turning all the compression and rebound adjusters according to the procedures described in page 151. After adjusting the adjusters simultaneously, suspension may be fine-tuned by turning one of the compression and rebound damping adjusters in one click or in 1/12 turn increments.
- If you have a problem finding an acceptable adjustment, return to the standard position and begin again.

1. Bounce the rear of the motorcycle up and down and check for smooth suspension action.

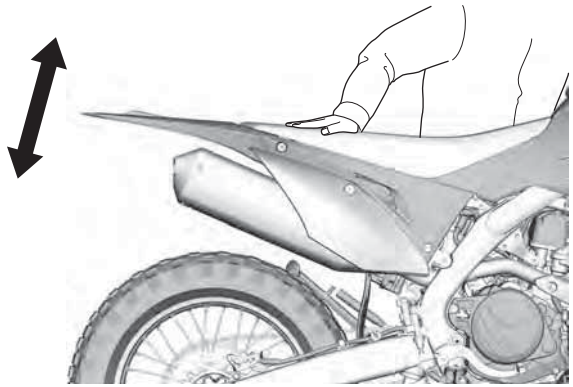

2. Remove the muffler (page 127), and subframe (page 49).
3. Check for a broken or collapsed spring.
4. Check the rear shock absorber (1) for a bent rod or oil leaks.

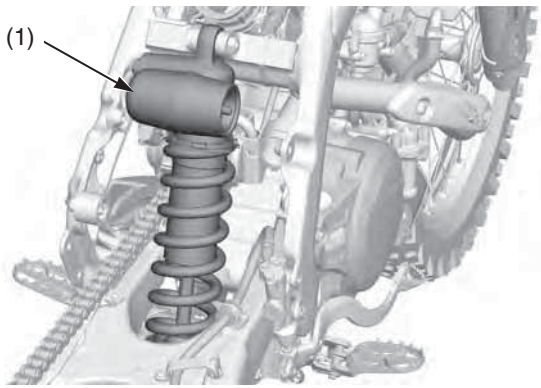


(1) rear shock absorber

5. Push the rear wheel sideways to check for worn or loose swingarm bearings. There should be no movement. If there is, have the bearings replaced by your dealer.

Refer to *Important Safety Precautions* on page 31.

Both the front and rear brakes are the hydraulic disc type. As the brake pads wear, the brake fluid level will drop. A leak in the system will also cause the level to drop.

Frequently inspect the system to ensure there are no fluid leaks. Periodically inspect the brake fluid level and the brake pads for wear.

If the braking response of the front brake lever or rear pedal feels unusual, check the brake pads. If the brake pads are not worn beyond the recommended limit (page 119), there is probably air in the brake system.
Refer to an official Honda Service Manual or see your dealer to have the air bled from the system.

## Front Brake Lever Adjustment

1. Slide the front brake lever cover (1).

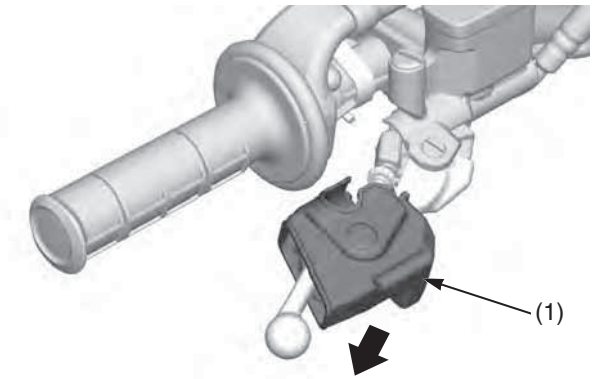


(1) brake lever cover

2. Loosen the lock nut (2).
3. To position the front brake lever farther away from the handgrip, turn the adjuster (3) clockwise.
   To position the front brake lever closer to the handgrip, turn the adjuster counterclockwise.
4. While holding the adjuster, tighten the lock nut to the specified torque:
   3.6 lbf·ft (4.9 N·m, 0.5 kgf·m)
5. Apply silicone grease to the contacting areas of the adjuster and knocker arm (4).

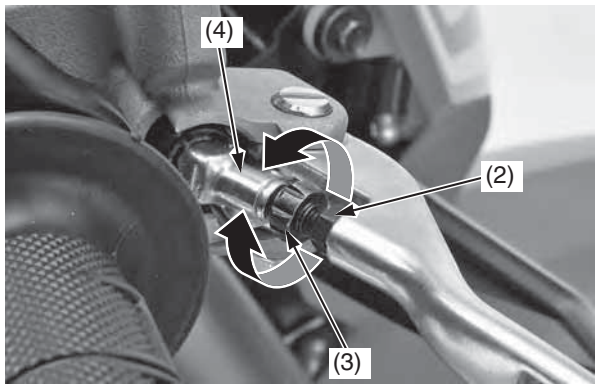


(2) lock nut
(3) adjuster
(4) knocker arm

6. Install the front brake lever cover in reverse order.

## Rear Brake Pedal Height

The rear brake pedal height should be approximately level with the right footpeg.

1. Loosen the lock nut (1) and turn the push rod (2) in direction (+) to raise the rear brake pedal (3) or in direction (–) to lower it.
2. Tighten the push rod lock nut to the specified torque at the desired pedal height.
   4.4 lbf·ft (5.9 N·m, 0.6 kgf·m)

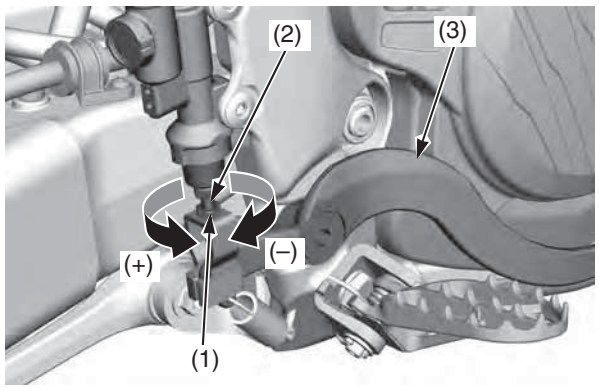


(1) lock nut
(2) push rod
(3) rear brake pedal
(+) raise the pedal height
(–) lower the pedal height

## Fluid Level Inspection

Front Brake Fluid Level Check

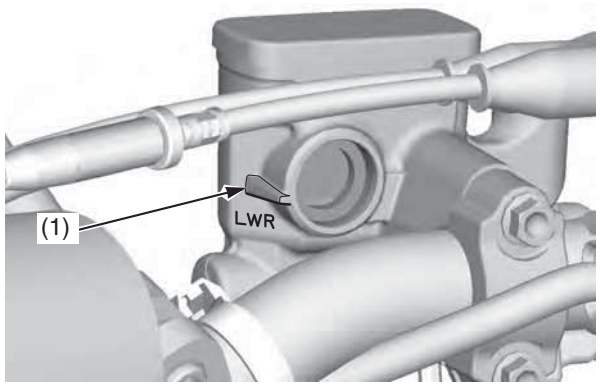


(1) LWR mark

With the motorcycle in an upright position, check the fluid level.
It should be above the LWR mark (1). If the level is at or below the LWR mark, check the brake pads for wear (page 119).
Worn brake pads should be replaced. If the pads are not worn, have your brake system inspected for leaks.

If the pulling distance for the front brake lever feels excessive, there is probably air in the brake system and it must be bled. Refer to an official Honda Service Manual or see your dealer for brake bleeding.

Honda recommends using Honda DOT 4 Brake Fluid from a sealed container, or an equivalent.

Other Checks:
Make sure there are no fluid leaks. Check for deterioration or cracks in the hoses and fittings.

Rear Brake Fluid Level Check

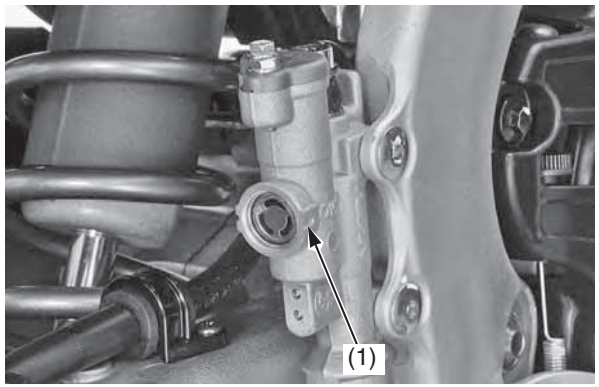


(1) LOWER mark

With the motorcycle in an upright position, check the fluid level.
It should be above the LOWER mark (1). If the level is at or below the LOWER mark, check the brake pads for wear (page 119).
Worn brake pads should be replaced. If the pads are not worn, have your brake system inspected for leaks.

If the travel for the rear brake pedal feels excessive, there is probably air in the brake system and it must be bled. Refer to an official Honda Service Manual or see your dealer for brake bleeding.

Honda recommends using Honda DOT 4 Brake Fluid from a sealed container, or an equivalent.

Other Checks:
Make sure there are no fluid leaks. Check for deterioration or cracks in the hoses and fittings.

(cont'd)

Adding Front Brake Fluid

**NOTICE**

*Spilled brake fluid will severely damage painted surfaces. It is also harmful to some rubber parts. Be careful whenever you remove the reservoir cap; make sure the reservoir is horizontal first.*

- Always use fresh DOT 4 brake fluid from a sealed container when servicing the system. Do not mix different types of fluid, they may not be compatible.
- The recommended brake fluid is Honda DOT 4 Brake Fluid or an equivalent.

1. Remove the front brake reservoir cap screws (1), reservoir cap (2), set plate (3) and diaphragm (4).
2. Fill the reservoir with DOT 4 brake fluid to the upper level mark (5). Do not overfill.
3. Install the diaphragm and reservoir cap.
4. Tighten the front brake reservoir cap screws to the specified torque:
   0.7 lbf·ft (1.0 N·m, 0.1 kgf·m)

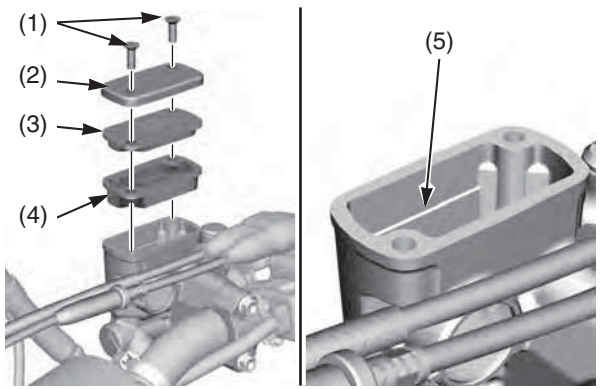


(1) front brake reservoir cap screws
(2) reservoir cap
(3) set plate
(4) diaphragm
(5) upper level mark

Adding Rear Brake Fluid

**NOTICE**

*Spilled brake fluid will severely damage painted surfaces. It is also harmful to some rubber parts. Be careful whenever you remove the reservoir cap; make sure the reservoir is horizontal first.*

- Always use fresh DOT 4 brake fluid from a sealed container when servicing the system. Do not mix different types of fluid, they may not be compatible.
- The recommended brake fluid is Honda DOT 4 Brake Fluid or an equivalent.

1. Remove the rear brake reservoir cap bolts (1), reservoir cap (2), set plate (3) and diaphragm (4).
2. Fill the reservoir with DOT 4 brake fluid to the upper level mark (5). Do not overfill.

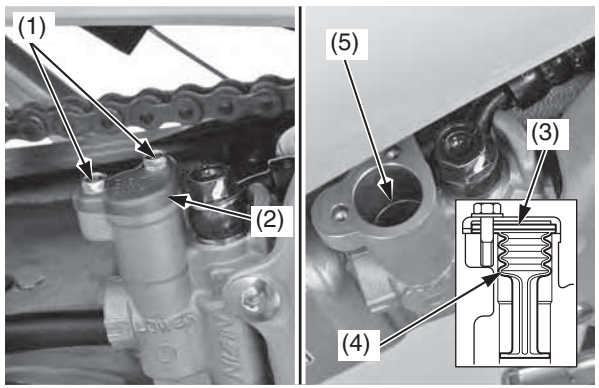


(1) rear brake reservoir cap bolts
(2) reservoir cap
(3) set plate
(4) diaphragm
(5) upper level mark

3. Install the diaphragm, set plate and reservoir cap.
4. Tighten the rear brake reservoir cap bolts to the specified torque:
   0.7 lbf·ft (1.0 N·m, 0.1 kgf·m)

## Brake Pad Wear

Brake pad wear depends on the severity of usage and track conditions. (Generally, the pads will wear faster with wet and dirty track conditions.) Inspect the brake pads at each regular maintenance interval (pages 33, 34).

Front Brake Pads
Inspect the brake pads (1) through the front wheel to determine the brake pad wear. If either brake pad is worn anywhere to a thickness of 0.04 in (1.0 mm), both brake pads must be replaced.

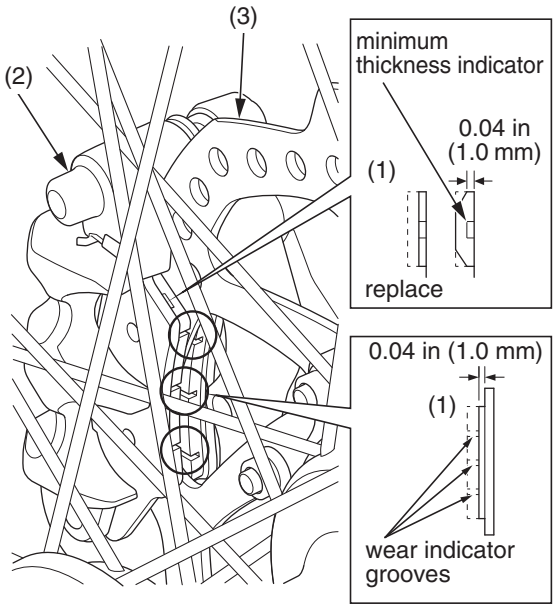


(1) brake pads
(2) front brake caliper
(3) brake disc

Rear Brake Pads
Inspect the brake pads (1) from the rear side of the caliper to determine the brake pad wear. If either brake pad is worn anywhere to a thickness of 0.04 in (1.0 mm), both brake pads must be replaced.

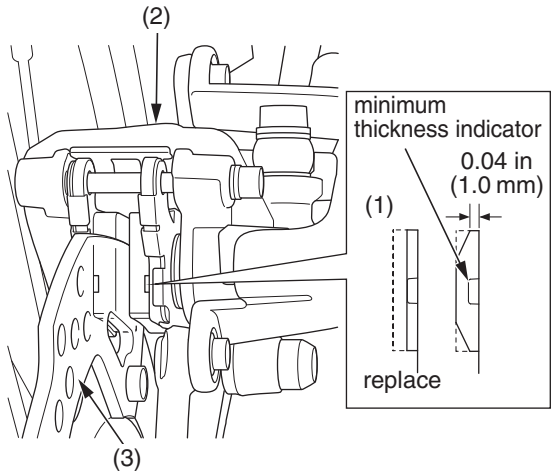


(1) brake pads
(2) rear brake caliper
(3) brake disc

## Other Inspections

Check that the front brake lever and rear brake pedal assemblies are positioned properly (page 116) and the securing bolts are tight.

Make sure there are no fluid leaks. Check for deterioration or cracks in the hoses and fittings.

# Wheels

Refer to *Important Safety Precautions* on page 31.

Keeping the wheels true (round) and maintaining correct spoke tension are critical to safe motorcycle operation. During the first few rides, spokes will loosen more rapidly due to the initial seating of the parts. Excessively loose spokes may result in instability at high speeds and the possible loss of control. It's also important that the rim locks are secure to prevent tire slippage.

## Wheel Rims & Spokes

1. Inspect the wheel rims (1) and spokes (2) for damage.
2. Tighten, any loose spokes and rim locks (3) to the specified torque:
   Spokes: 2.7 lbf·ft (3.7 N·m, 0.4 kgf·m)
   Rim Locks: 9 lbf·ft (12 N·m, 1.2 kgf·m)
3. Check wheel rim runout. If runout is noticeable, see an official Honda Service Manual for inspection instructions.

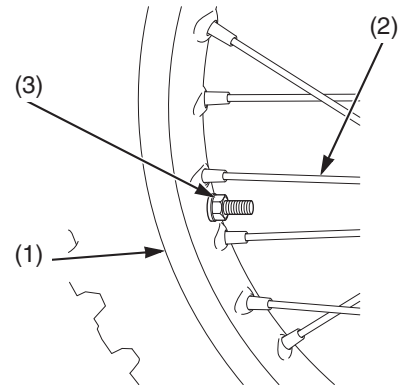


(1) wheel rim
(2) spokes
(3) rim lock

## Axles & Wheel Bearings

See an official Honda Service Manual for inspection information:

1. Check the axle shaft for runout.
2. Check the condition of the wheel bearings.

Refer to *Important Safety Precautions* on page 31.

To safely operate your CRF, the tires must be the proper type (off-road) and size, in good condition with adequate tread, and correctly inflated.

**⚠ WARNING**

Using tires that are excessively worn or improperly inflated can cause a crash in which you can be seriously hurt or killed.

Follow all instructions in this owner's manual regarding tire inflation and maintenance.

The following pages give detailed information on how and when to check your air pressure, how to inspect your tires for wear and damage, and our recommendations on tire repair and replacement.

## Air Pressure

Properly inflated tires provide the best combination of handling, tread life, and riding comfort. Generally, underinflated tires wear unevenly, adversely affect handling, and are more likely to fail from being overheated.
Underinflated tires can also cause wheel damage on hard terrain. Overinflated tires make your CRF ride harshly, are more prone to damage from surface hazards, and wear unevenly.

Make sure the valve stem caps are secure. If necessary, install new caps.

Always check air pressure when your tires are "cold." If you check air pressure when your tires are "warm" — even if your CRF has only been ridden for a few miles — the readings will be higher. If you let air out of warm tires to match the recommended cold pressures, the tires will be underinflated.
The correct "cold" tire pressures are:

| | |
|---|---|
| Front | 22 psi (150 kPa, 1.50 kgf/cm$^2$) |
| Rear | 22 psi (150 kPa, 1.50 kgf/cm$^2$) |

If you decide to adjust tire pressures for a particular riding condition, make changes a little at a time.

## Inspection

Take time to inspect your tires and wheels before you ride.

- Inspect carefully for bumps or bulges in the side of the tire or the tread. Replace any tire that has a bump or bulge.
- Look closely for cuts, slits, or cracks in the tires. Replace a tire if you can see fabric or cord.
- Check for rocks or other objects embedded in the tire or tread. Remove any objects.
- Check the position of both valve stems. A tilted valve stem indicates the tube is slipping inside the tire or the tire is slipping on the rim.

## Tube Replacement

If a tube is punctured or damaged, you should replace it as soon as possible. A repaired tube may not have the same reliability as a new one, and it may fail while you are riding.

Use a replacement tube equivalent to the original.

## Tire Replacement

The tires that came on your CRF were designed to provide a good combination of handling, braking, durability, and comfort across a broad range of riding conditions.

**⚠ WARNING**

Installing improper tires on your motorcycle can affect handling and stability. This can cause a crash in which you can be seriously hurt or killed.

Always use the size and type of tires recommended in this owner's manual.

| | | |
|---|---|---|
| Front | 80/100-21 51M | |
| | DUNLOP | MX52F |
| Rear | 110/100-18 64M | |
| | DUNLOP | MX52 |
| Type | bias-ply, tube | |

- When replacing, use the original equipment tires or equivalent tires of the same size, construction, speed rating, and load range as the original.
- Replace the tube any time you replace a tire. The old tube will probably be stretched and, if installed in a new tire, could fail.

Refer to *Important Safety Precautions* on page 31.

1. Check the side stand spring (1) for damage and loss of tension.
2. Check the side stand assembly for freedom of movement.

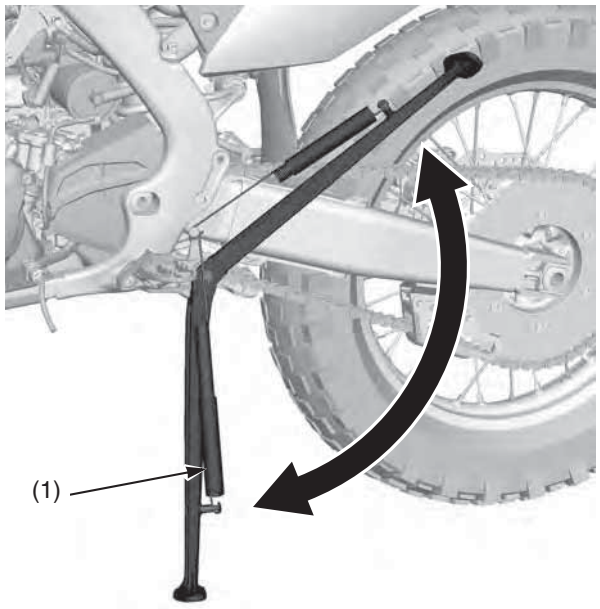


(1) side stand spring

If the side stand is stiff or squeaky, clean the pivot area and lubricate the pivot bolt with molybdenum grease.

# Drive Chain

Refer to *Important Safety Precautions* on page 31.

The service life of the chain depends on proper lubrication and adjustment. Poor maintenance can cause premature wear or damage to the drive chain or sprockets.

When the motorcycle is ridden on unusually dusty or muddy tracks, more frequent maintenance will be necessary.

Before servicing your drive chain, turn the engine OFF and check that your transmission is in neutral.

## Inspection

1. Turn the engine off, raise the rear wheel off the ground by placing an optional workstand or equivalent support under the engine and shift the transmission into neutral.
2. Check the drive chain slack (1) in the upper drive chain run midway between the drive sprocket (2) and driven sprocket (3). Drive chain slack should allow the following vertical movement by hand:
   1 – 1 3/8 in (25 – 35 mm)

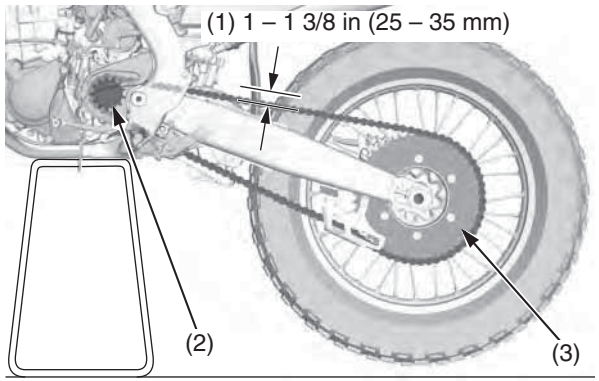


(1) drive chain slack
(2) drive sprocket
(3) driven sprocket

3. Check drive chain slack at several points along the chain. The slack should remain constant. If it isn't, some links may be kinked and binding. Lubricating the chain will often eliminate binding and kinking.

**NOTICE**

*Excessive chain slack may allow the drive chain to damage the engine cases.*

4. Inspect the drive chain for:
   - damaged rollers
   - loose pins
   - dry or rusted links
   - kinked or binding links
   - excessive wear

Replace the drive chain (page 126) if it has damaged rollers, loose pins, or kinks that cannot be free. Lubricate the drive chain (page 125) if it appears dry or shows signs of rust. Lubricate any kinked or binding links and work them free. Adjust chain slack if needed (page 125).

## Drive Chain Sliders

1. Check the chain slider (1) for wear. Replace it if below the service limit.
   SERVICE LIMIT:
   upper side: 0.04 in (1.0 mm)
   lower side: 0.10 in (2.5 mm)

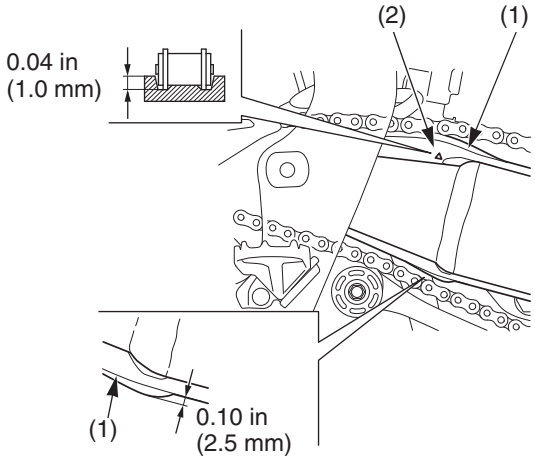


(1) chain slider
(2) wear indicator

2. Check the chain guide slider (3) for wear. Replace the guide slider if it is worn to the bottom of the wear limit (4).

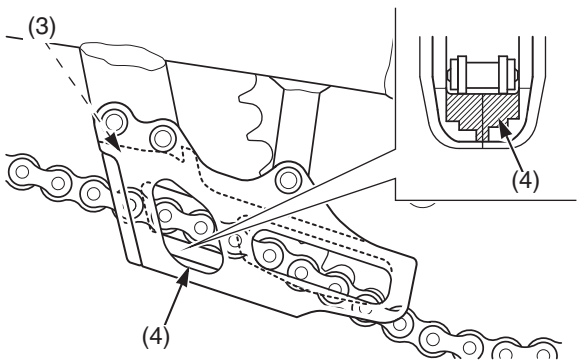


(3) chain guide slider
(4) wear limit

## Drive Chain Rollers

Check the upper drive chain roller (1) and lower drive chain roller (2) for wear or damage.
Measure the diameter of the drive chain rollers and replace them if below the service limit.
Service Limit:
Upper roller: 1.2 in (31 mm)
Lower roller: 1.2 in (31 mm)

Replace the roller if necessary as follows.
Install the upper drive chain roller (Green) with the "→" mark (3) facing toward the bracket and lower drive chain roller (Black) with the "→" mark facing toward outside.
Install new a drive chain roller bolt (4) and nut (5).

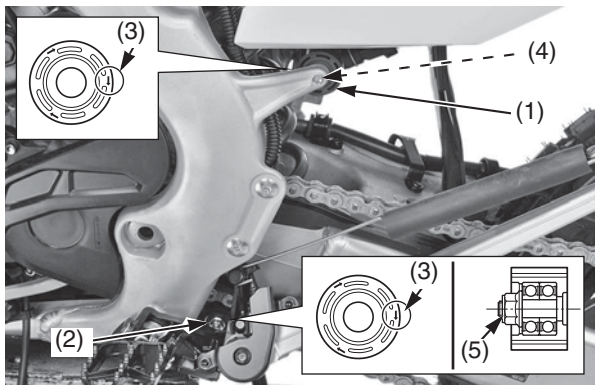


(1) upper drive chain roller (Green)
(2) lower drive chain roller (Black)
(3) "→" mark
(4) drive chain roller bolt (new)
(5) drive chain roller nut

Clean the threads of the drive chain roller bolt and apply locking agent to the threads.

Tighten the drive chain roller bolt and nut to the specified torque:
9 lbf·ft (12 N·m, 1.2 kgf·m)

## Adjustment

1. Loosen the rear axle nut (1).
2. Loosen the chain adjuster lock nuts (2) and turn the adjusting bolts (3) counterclockwise to decrease slack or clockwise to increase slack. Align the index marks (4) of the axle plates (5) with the same reference marks (6) on both sides of the swingarm.

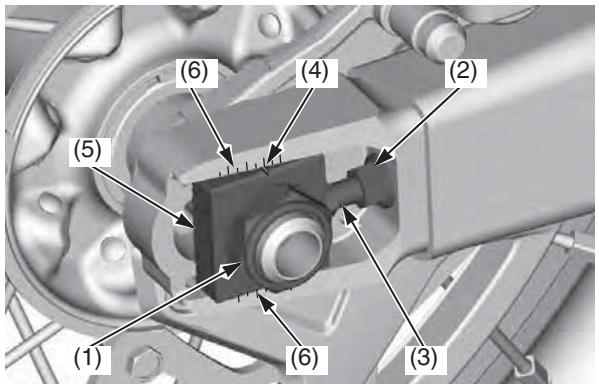


(1) rear axle nut
(2) chain adjuster lock nuts
(3) adjusting bolts
(4) index marks
(5) axle plates
(6) reference marks

3. Tighten the rear axle nut to the specified torque:
   94 lbf·ft (128 N·m, 13.1 kgf·m)
4. Recheck chain slack and adjust as necessary.
5. Turn the adjusting bolt counterclockwise until it touches the axle plates lightly. Then tighten the chain adjuster lock nuts to the specified torque while holding the adjusting bolts with a wrench:
   20 lbf·ft (27 N·m, 2.8 kgf·m)

## Lubrication

Lubricate the drive chain with Pro Honda HP Chain Lube or an equivalent chain lubricant or drive chain lubricant designed specifically for use with O-ring chains. Wipe off the excess chain lubricant.

Commercial chain lubricants not designed for motorcycle drive chains may contain solvents which could damage the O-rings.

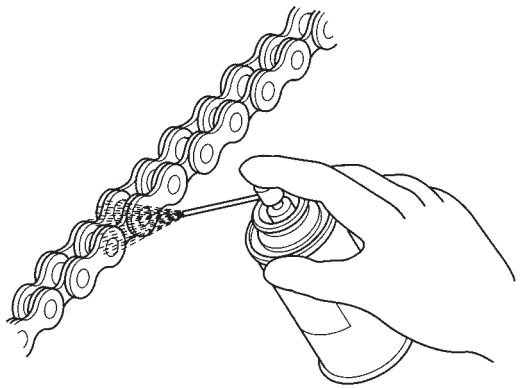

## Removal, Cleaning & Replacement

For maximum service life, the drive chain should be cleaned, lubricated, and adjusted before each outing. Your CRF has an endless (riveted master link) type chain. It should only be removed or replaced by your dealer.

The O-rings can be damaged by steam cleaning, high pressure washers, and certain solvents.

1. Clean the side surfaces of the chain with a dry cloth. Use a high flash point solvent such as kerosene or Pro Honda chain cleaner – not gasoline. Do not brush the rubber O-rings. Brushing will damage them. Use of a solvent may also damage the O-rings.
2. Replace the drive chain if it has damaged rollers, loose fitting links, damaged O-rings, or otherwise appears unserviceable.
3. Measure the drive chain plate (1). If the drive chain plate is worn anywhere to a thickness of 0.52 in (13.3 mm), the drive chain must be replaced.

   Chain:
   Size/link: RK520EXU/116LE

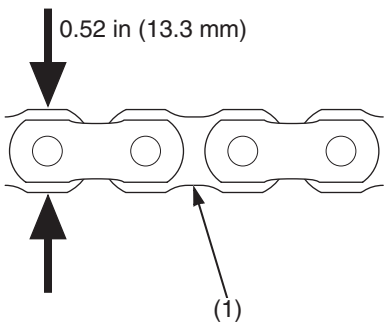


(1) drive chain plate (inner)

4. Inspect the sprocket teeth for wear or damage. We recommend replacing the sprocket whenever a new chain is installed.
   Both chain and sprockets must be in good condition, or the new replacement chain or sprocket(s) will wear rapidly.
   Excessively worn sprocket teeth have a hooked, worn appearance. Replace any sprocket which is damaged or excessively worn.

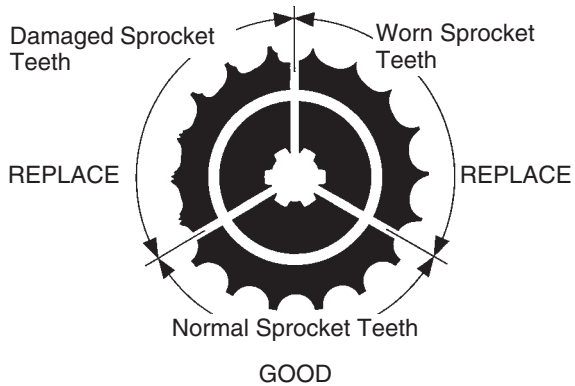


**NOTICE**

*Use of a new chain with worn sprockets will cause rapid chain wear.*

5. Lubricate the drive chain (page 125).
6. Recheck chain slack and adjust if necessary.

Refer to *Important Safety Precautions* on page 31.

## Exhaust Pipe/Muffler Inspection

Check the mounting bolts and exhaust pipe joint nuts for tightness.
Check the exhaust pipe and muffler for cracks or deformation.
A damaged exhaust pipe and muffler may reduce engine performance.

## Muffler Removal

1. Remove the seat (page 43).
2. Remove the right side cover (page 44).
3. Loosen the muffler clamp bolt (1).

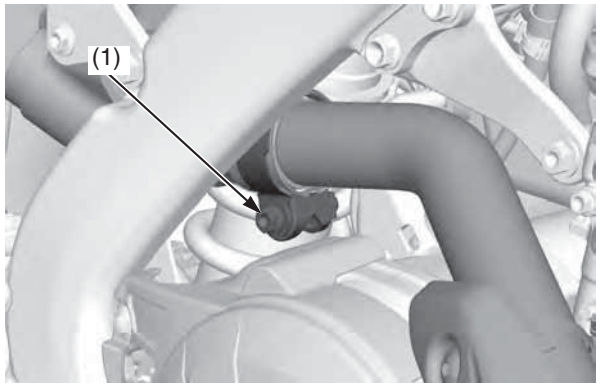


(1) muffler clamp bolt

4. Remove the muffler mounting A bolt (2), B bolt (3), washer (4), and muffler (5).

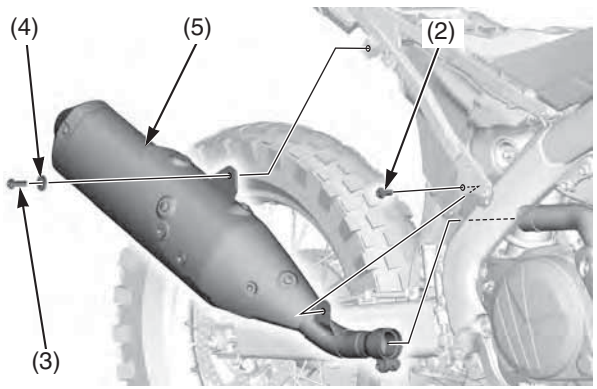


(2) muffler mounting A bolt
(3) muffler mounting B bolt
(4) washer
(5) muffler

## Muffler Installation

1. Remove the gasket (1).
2. Install a new gasket onto the exhaust pipe (2).
3. Align the cutout (3) of the muffler (4) with the tab (5) of the muffler clamp (6).
4. Install the muffler.

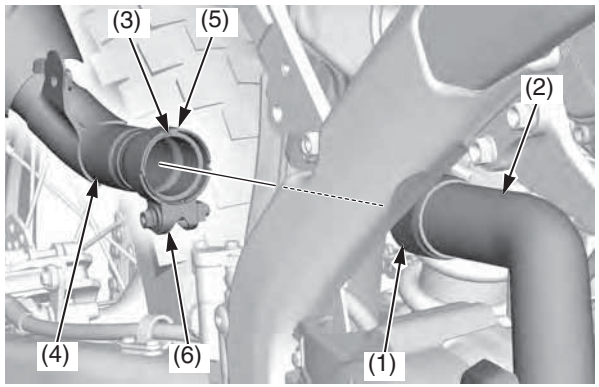


(1) gasket
(2) exhaust pipe
(3) cutout
(4) muffler
(5) tab
(6) muffler clamp

5. Install the washer (7), muffler mounting B bolt (8) and A bolt (9).

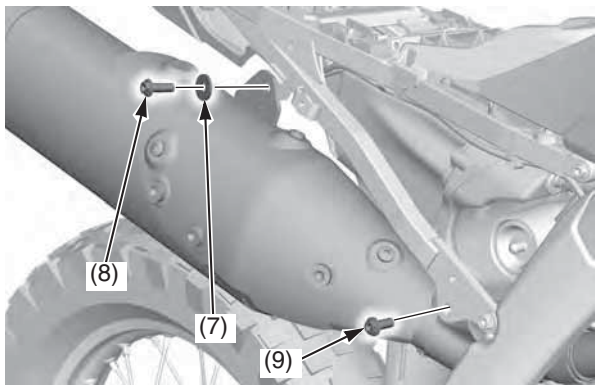


(7) washer
(8) muffler mounting B bolt
(9) muffler mounting A bolt

(cont'd)

6. Tighten the muffler clamp bolt (10) to the specified torque:
   15 lbf·ft (20 N·m, 2.0 kgf·m)

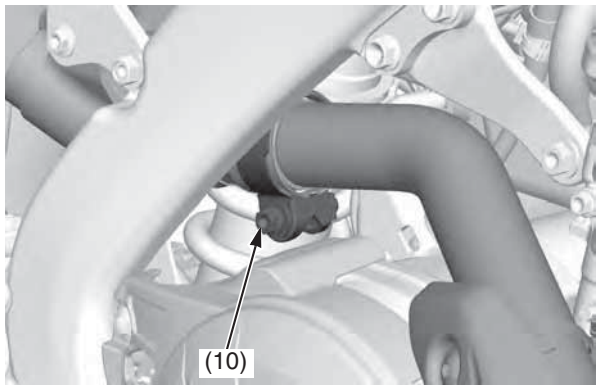


(10) muffler clamp bolt

7. Tighten the muffler mounting B bolt (8) and A bolt (9) to the specified torque:
   19 lbf·ft (26 N·m, 2.7 kgf·m)

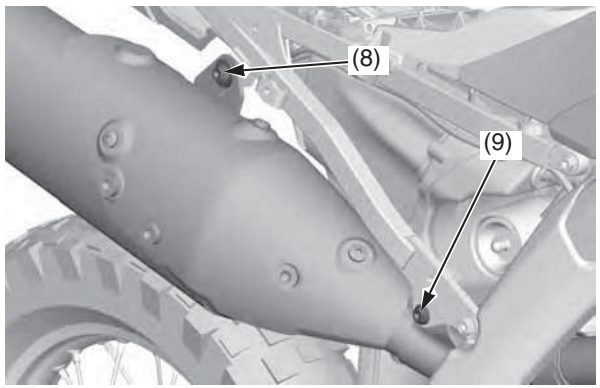


(8) muffler mounting B bolt
(9) muffler mounting A bolt

8. Install the right side cover (page 44).
9. Install the seat (page 43).

## Exhaust Pipe Removal

1. Remove the muffler (page 127).
2. Remove the exhaust pipe joint nuts (1), exhaust pipe (2) and gasket (3).

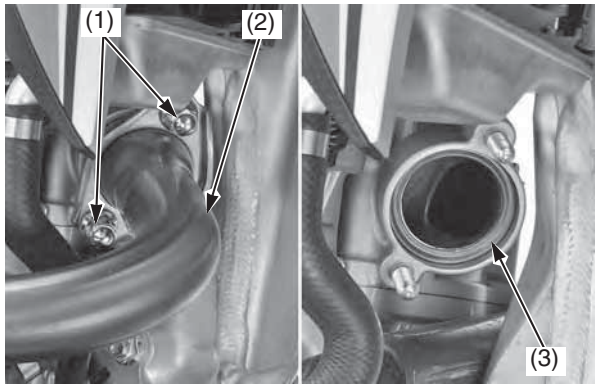


(1) exhaust pipe joint nuts
(2) exhaust pipe
(3) gasket

## Exhaust Pipe Installation

1. Install a new exhaust pipe gasket (1).
2. Install the exhaust pipe (2) and exhaust pipe joint nuts (3) but do not tighten the nuts yet.

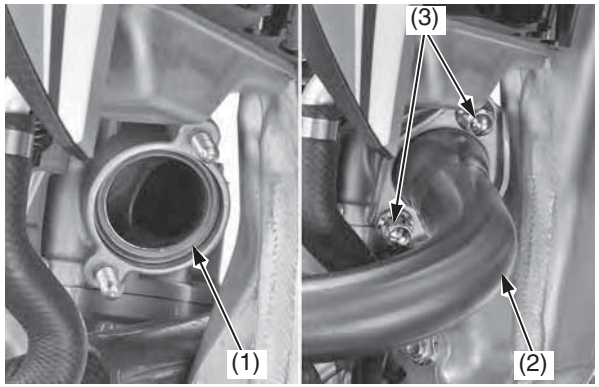


(1) exhaust pipe gasket (new)
(2) exhaust pipe
(3) exhaust pipe joint nuts

3. Install the muffler (page 127) but do not tighten the bolts yet.
4. Tighten the exhaust pipe joint nuts to the specified torque:
   16 lbf·ft (22 N·m, 2.2 kgf·m)
5. Tighten the muffler clamp bolt, muffler mounting A bolt and B bolt (page 127).

## Spark Arrester Inspection

The spark arrester must be serviced every 1,000 mi (1,600 km) of running or 100 operating hours to maintain its efficiency.

Regular servicing prevents carbon buildup (which can diminish engine performance) and also complies with USDA regulations for regular maintenance to assure proper function.

The spark arrester prevents random sparks from the combustion process in your engine from reaching the environment.

1. Allow the engine and muffler (1) to cool.
2. Remove the tail cap cover bolts (2), washers (3) and tail cap cover (4) from the muffler.

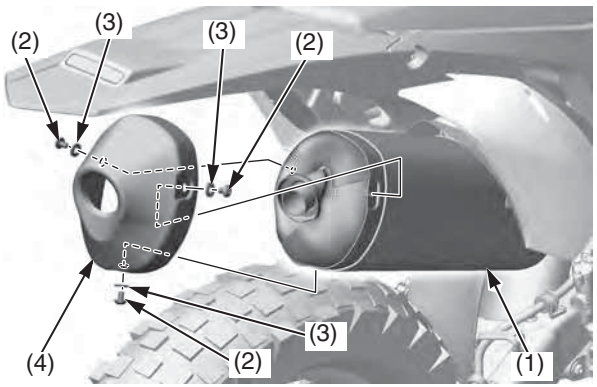


(1) muffler
(2) tail cap cover bolts
(3) washers
(4) tail cap cover

3. Remove the glass wool (5).

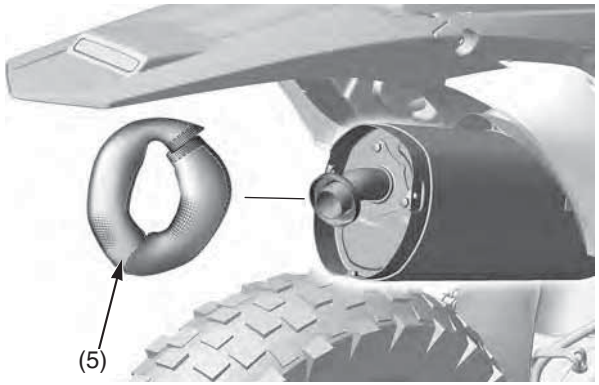


(5) glass wool

4. Remove the spark arrester mounting bolts (6), spark arrester (7) and gasket (8) from the muffler (1).

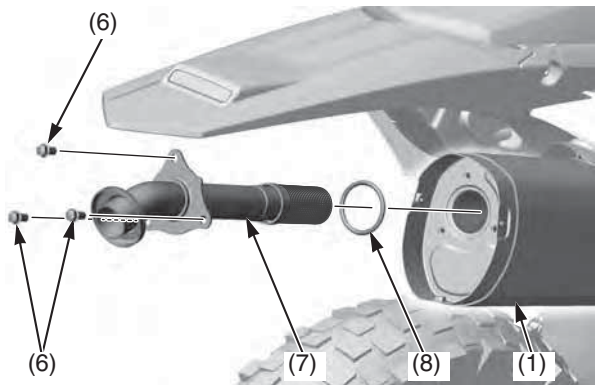


(1) muffler
(6) spark arrester mounting bolts
(7) spark arrester
(8) gasket

5. Use a brush to remove carbon deposits from the spark arrester screen. Be careful to avoid damaging the spark arrester screen (9). The spark arrester must be free of breaks and holes. Replace, if necessary.

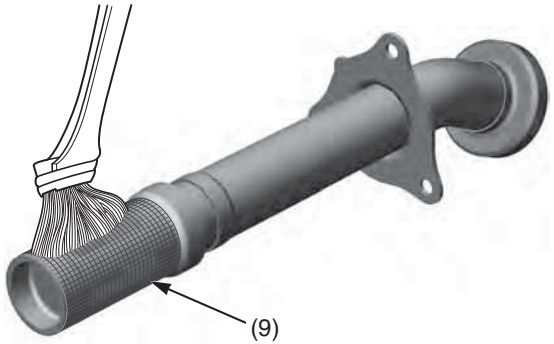


(9) spark arrester screen

6. Install a new gasket (8) and the spark arrester (7) in the muffler (1) and tighten the spark arrester mounting bolts (6) to the specified torque:
   6.6 lbf·ft (9.0 N·m, 0.9 kgf·m)

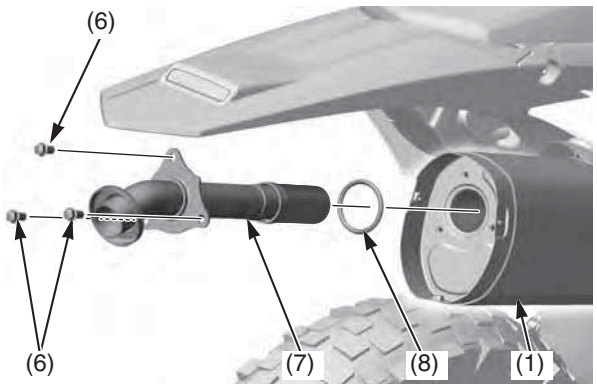


(1) muffler
(6) spark arrester mounting bolts
(7) spark arrester
(8) gasket (new)

(cont'd)

7. Check the glass wool (5). Replace, if necessary.
   Install the glass wool with its seam (10) side facing the muffler (1) and start winding the glass wool from the position as shown.

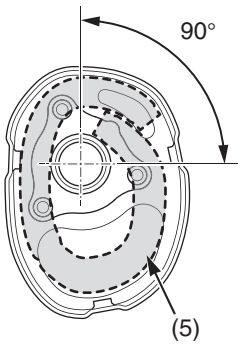


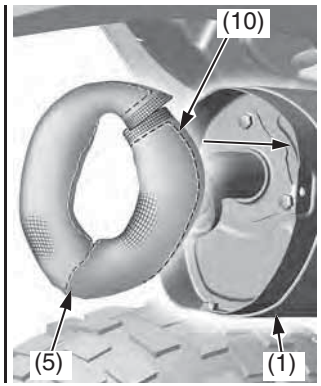


(1) muffler
(5) glass wool
(10) seam

8. Install the tail cap cover (4), washers (3) and tighten the tail cap cover bolts (2) to the specified torque:
   3.9 lbf·ft (5.25 N·m, 0.5 kgf·m)

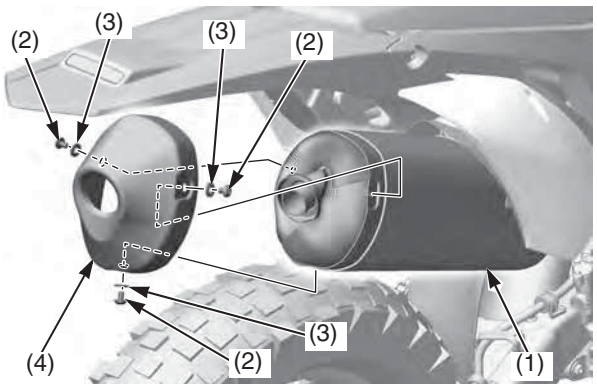


(1) muffler
(2) tail cap cover bolts
(3) washers
(4) tail cap cover

Refer to *Important Safety Precautions* on page 31.

## Steering Head Bearing Inspection

1. With your CRF on an optional workstand or equivalent support (front wheel elevated), turn the handlebar to the right and left to check for roughness in the steering head bearings.

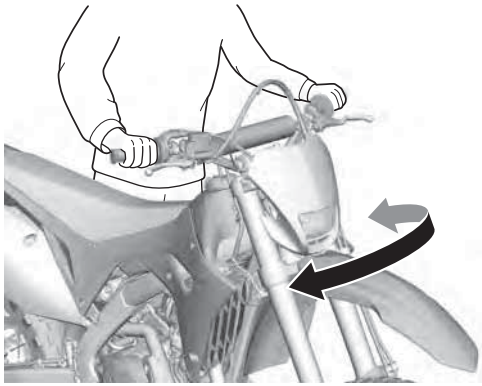

2. Stand in front of your CRF, grab the fork (at the axle), look at the steering head, and push the fork in and out (toward the engine) to check for play in the steering head bearings.

If any roughness or play is felt, but you do not see any movement in the steering head, the fork bushings may be worn.
Refer to an official Honda Service Manual for replacement or adjustment procedures, or see your dealer.

## Handlebar Inspection

1. Check the handlebar (1) for bends or cracks.
2. Check that the handlebar has not moved from its original position where the end of the right handlebar holders (2) is aligned with the paint mark (3).
3. Check the torque of the handlebar upper holder bolts (4):
   16 lbf·ft (22 N·m, 2.2 kgf·m)
   Tighten the front bolts first.

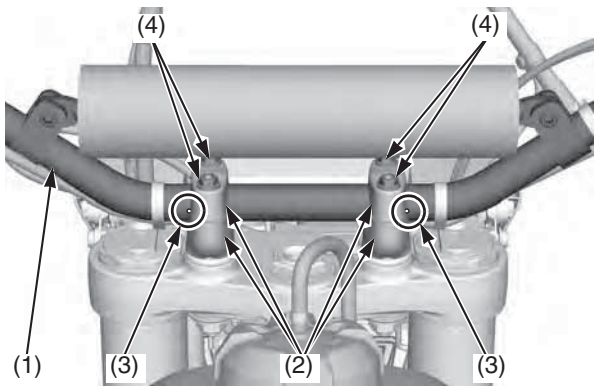


(1) handlebar
(2) handlebar holders
(3) paint marks
(4) handlebar upper holder bolts

## Control Cables

Periodically, disconnect the clutch cables at their upper ends. Thoroughly lubricate the cable pivot points with a commercially available cable lubricant. If the clutch lever and throttle operation is not smooth, replace the cable.
Be sure the throttle returns freely from fully open to fully closed automatically, in all steering positions.

## Nuts, Bolts, Fasteners

Check and tighten nuts, bolts, and fasteners before every outing.

**ENGINE**

| Item | | Torque | | |
|---|---|---|---|---|
| | | lbf·ft | N·m | kgf·m |
| 1 | Cylinder head cover socket bolts | 7 | 10 | 1.0 |
| 2 | Clutch cover bolts | 7 | 10 | 1.0 |
| 3 | Water pump cover bolts | 7 | 10 | 1.0 |
| 4 | Crankshaft hole cap | 11 | 15 | 1.5 |
| 5 | Oil filter cover bolts | 7 | 10 | 1.0 |
| 6 | Cylinder head bolts | 37 | 50 | 5.1 |
| 7 | Exhaust pipe joint nuts | 16 | 22 | 2.2 |
| 8 | Drive sprocket bolt | 23 | 31 | 3.2 |
| 9 | Engine oil drain bolt | 13 | 18 | 1.8 |
| 10 | Coolant drain bolt | 7 | 10 | 1.0 |

**RIGHT SIDE**

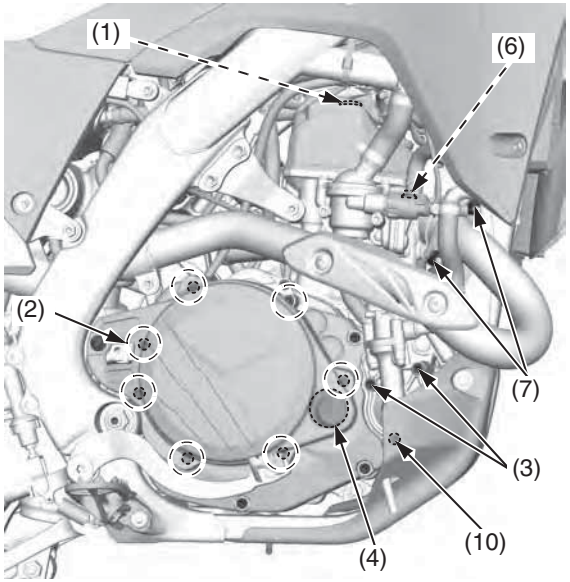


(1) cylinder head cover socket bolts
(2) clutch cover bolts
(3) water pump cover bolts
(4) crankshaft hole cap
(6) cylinder head bolts
(7) exhaust pipe joint nuts
(10) coolant drain bolt

**LEFT SIDE**

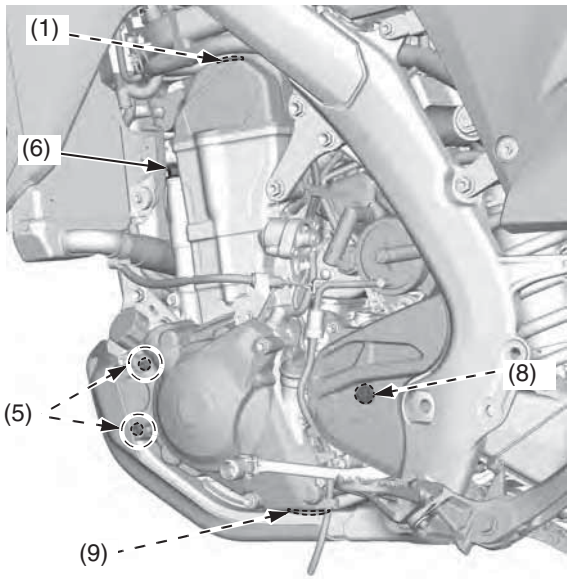


(1) cylinder head cover socket bolts
(5) oil filter cover bolts
(6) cylinder head bolts
(8) drive sprocket bolt
(9) engine oil drain bolt

Refer to *Important Safety Precautions* on page 31.

Your CRF has a lithium-ion (li-ion) battery.
Clean the battery terminals if they become dirty or corroded.

**NOTICE**

*An improperly disposed of battery can be harmful to the environment and human health.*
*Always confirm local regulations for proper battery disposal instruction.*

Power of the start button uses current from the battery.
Limited operation also allows the battery to discharge. If you do not ride frequently, we recommend that you charge the battery frequently (see *Battery Charging* on page 134).

If you plan to store your CRF, see Battery Storage (this page).

If your battery seems weak and/or is leaking electrolyte (cause slow starting), see your dealer.
If you smell an unusual odor coming from the lithium-ion (li-ion) battery, park your CRF in a safe place outside and away from flammable objects, then push and hold the engine stop button until the engine stops completely.

The battery has a limited life span.
Consult your dealer about when you should replace the battery. Always replace the battery with another lithium-ion (li-ion) battery of the same type.

The lithium-ion (li-ion) battery contains a fuse inside.
If the fuse blows, the battery needs replacement.
The voltage may read above 12V even with a blown battery fuse when the battery is unmounted (page 165).

## Battery Storage

Before you remove the battery, be sure to read all the information that follows, as well as the information on the battery label.

**⚠ WARNING**

The battery contains flammable organic solvent as electrolyte.

You can be burned or seriously injured if the battery is handled improperly.

- Keep the battery away from heat, sparks, and flame.
- Keep the battery out of the reach of children.
- Do not disassemble or modify the battery or battery terminals.
- Do not short-circuit the battery with metal tools or other metal objects.
- Do not subject the battery to impacts.

If you do not remove the battery, we recommend disconnecting the battery cables (negative cable first).

The battery is located under the seat.

Removal

1. Remove the seat (page 43).
2. Remove the battery band (1).
3. Remove the positive terminal cover (2).
4. Disconnect the negative (–) terminal (3) first, then the positive (+) terminal (4) and remove the battery (5).

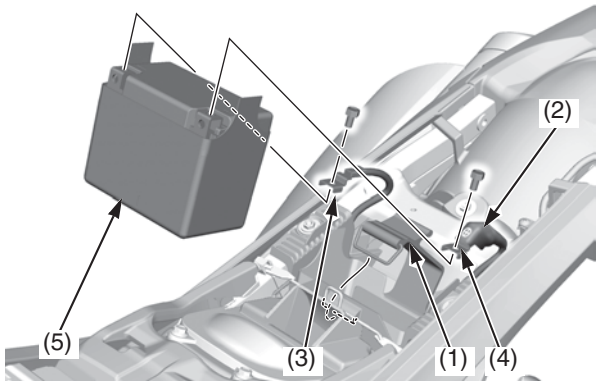


(1) battery band
(2) positive terminal cover
(3) negative (–) terminal
(4) positive (+) terminal
(5) battery

5. Unless you have been riding regularly, charge the battery (page 134).
6. Store your battery in an easy-to-reach location off the floor, in an area protected from freezing temperatures and direct sunlight.
7. Clean the battery box after removing the battery for storage. Dry the battery box.
8. Slow charge the battery (page 134) once every 30 days.

(cont'd)

Installation

1. Reinstall the battery (1) in the reverse order of removal. Check that the battery rubber in place. Be sure to connect the positive (+) terminal first, then the negative (–) terminal.
2. Tighten the positive (+) terminal bolt (2) and negative (–) terminal bolt (3) to the specified torque:
   1.5 lbf·ft (2.0 N·m, 0.2 kgf·m)
3. Install the battery band (4).

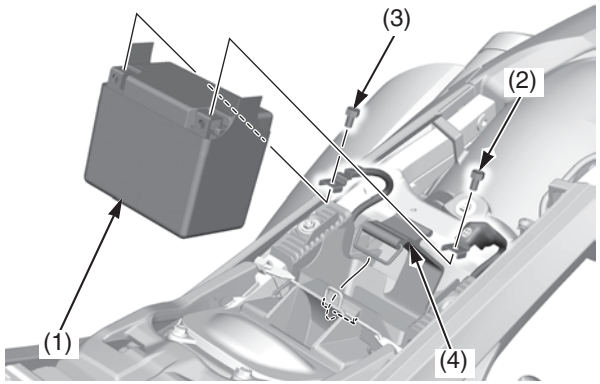


(1) battery
(2) positive (+) terminal bolt
(3) negative (–) terminal bolt
(4) battery band

4. Install the seat (page 43).

## Battery Charging

Be sure to read the information that came with your battery charger and follow the instructions on the battery. Improper charging may damage the battery.

We recommend using a charger recommended by your lithium-ion (li-ion) battery manufacturer which can be purchased from your dealer. These units can be left connected for long periods without risking damage to the battery. However, the lithium-ion (li-ion) battery may degrade if stored with a charger connected. Do not intentionally leave the charger connected longer than the time period recommended in the charger's instructions.

Using a battery charger that is not recommended can cause permanent damage to your battery.

Refer to *Important Safety Precautions* on page 31.

## Headlight Bulb

1. Remove the front visor bolts (1).

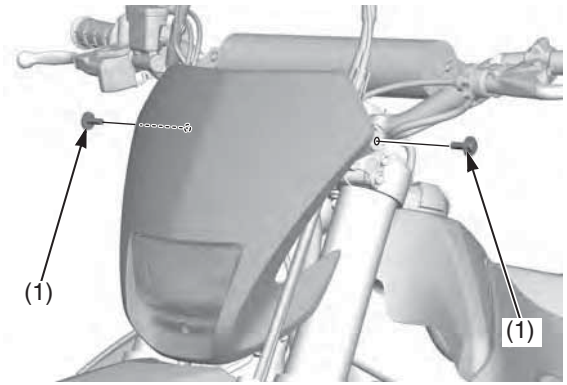


(1) front visor bolts

2. Pull out the front visor (2) and disconnect the headlight connector (3).
   Remove the dust cover (4).

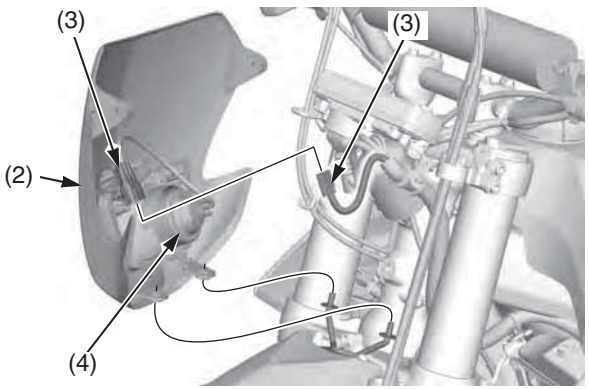


(2) front visor
(3) headlight connector
(4) dust cover

3. To pull the headlight bulb out, push and turn the headlight bulb socket (5) counterclockwise.

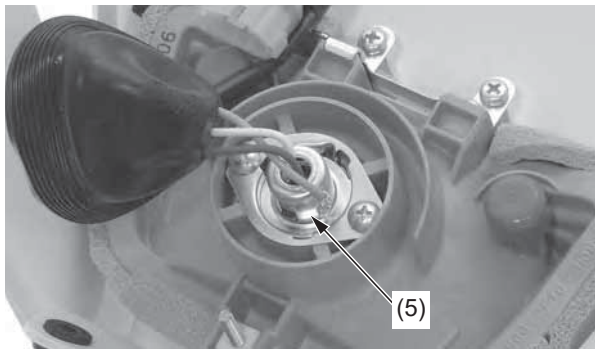


(5) headlight bulb socket

4. To install a new headlight bulb, push and turn the headlight bulb socket clockwise.

If you touch the bulb with your bare hands, clean it with a cloth moistened with denatured alcohol to prevent early bulb failure.

5. Install the dust cover (4) tightly against the headlight unit with its "TOP" mark (6) facing up.

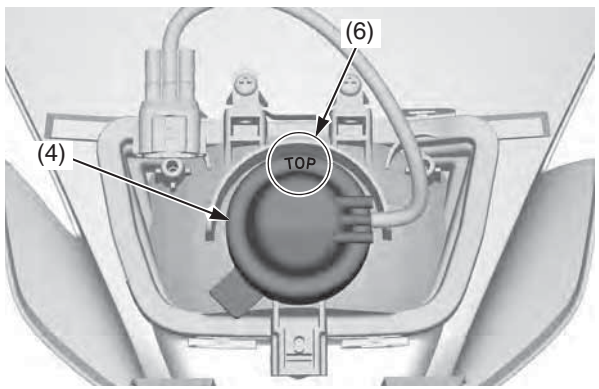


(4) dust cover
(6) "TOP" mark

6. To install the headlight, reverse the removal procedure.

## Headlight Aim

The headlight aim can be raised or lowered.
Turn the adjusting screw (1) clockwise to move the headlight up or turn the adjusting screw counterclockwise to move the headlight down to proper adjustment.

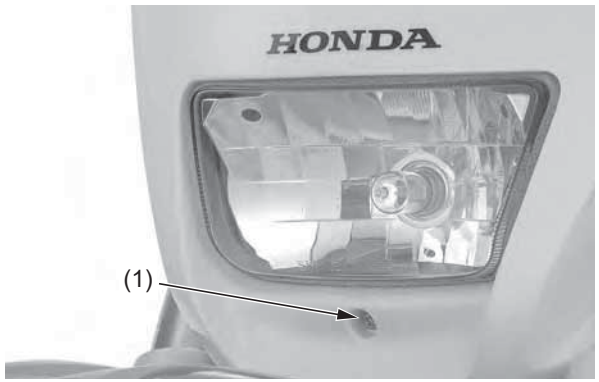


(1) adjusting screw

## Taillight

The taillight uses LED illumination.
If the taillight does not function properly, see your dealer for service.

This model is equipped with an electric starter and battery for easy engine starting.
There is a possibility of damage to the lighting system if the battery is carelessly removed.

Refer to *Important Safety Precautions* on page 31.

Frequent cleaning and polishing will keep your CRF looking newer longer. Frequent cleaning also identifies you as an owner who values his motorcycle. A clean CRF is also easier to inspect and service.

While you're cleaning, be sure to look for damage, wear, and gasoline or oil leaks.

## General Recommendations

- To clean your CRF you may use:
  - water
  - Hondabrite
  - a mild, neutral detergent and water
  - a mild spray and wipe cleaner/polisher
  - a mild spray and rinse cleaner/degreaser and water
- Avoid products that contain harsh detergents or chemical solvents that could damage the metal, paint, and plastic on your CRF or discolor the seat and decals.
- If your CRF is still warm from recent operation, give the engine and exhaust system time to cool off.
- We recommend the use of a low pressure garden hose to wash your CRF. High pressure washers (like those at coin-operated car washes) can damage certain parts of your CRF. The force of water under extreme pressure can penetrate the dust seals of the suspension pivot points and steering head bearings-driving dirt inside and needed lubrication out.

If you use a high pressure washer, avoid spraying the following areas:

brake master cylinders
drive chain
electrical circuit
engine stop button
muffler outlet
steering head bearings (1)
suspension pivot points (2)
throttle body
under fuel tank
under seat

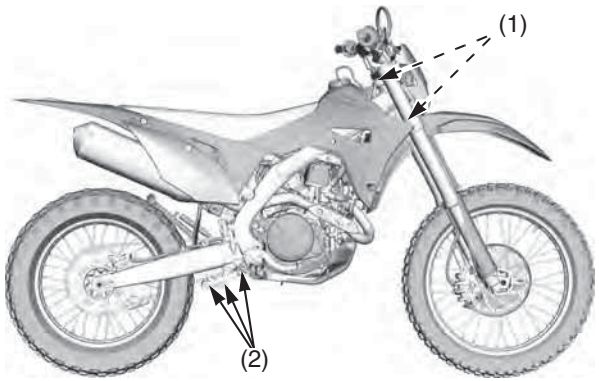


(1) steering head bearings
(2) suspension pivot points

**NOTICE**

*High pressure water (or air) can damage certain parts of your CRF.*

You may use Pro Honda Hondabrite, a multi-surface cleaner/degreaser, to remove both dirt and petroleum-based grime from paint, alloy, plastic, and rubber surfaces. Wet any heavy deposits with water first. Then spray on Pro Honda Hondabrite and rinse with a low pressure garden hose at full pressure. Stubborn deposits may require a quick wipe with a sponge.

## Washing Your Motorcycle with a Mild Detergent

Allow the engine, muffler, brakes, and other high-temperature parts to cool before washing.

1. Rinse your CRF thoroughly using a low pressure garden hose to remove loose dirt.
2. Fill a bucket with cool water. Mix in a mild, neutral detergent, such as dish washing liquid or a product made especially for washing motorcycles or automobiles.
3. Wash your CRF with a sponge or a soft towel. As you wash, check for heavy grime. If necessary, use a mild cleaner/degreaser to remove the grime.
   The headlights' inside lens may fog temporarily after washing or while riding in the rain. This does not impact the headlight function.
   Any condensation inside the headlight should dissipate after a few minutes of running the engine with the headlight(s) on. However, if you see a large amount of water or ice accumulated inside the lens(es), have your vehicle inspected by your dealer.

**NOTICE**

*Do not use steel wool to clean the frame as it could damage or discolor the frame surface.*
*Muffler stain remover (Scotch Brite Hand Pad #7447-maroon) is for removing stains on the non-coated aluminum frame only.*

4. After washing, rinse your CRF thoroughly with plenty of clean water to remove any residue.
   Detergent residue can corrode alloy parts.

5. Dry your CRF with a chamois or a soft towel. Leaving water on the surface to air dry can cause dulling and water spots. As you dry, inspect for chips and scratches.
6. Lubricate the drive chain to prevent rusting.
7. Start the engine and let it idle for several minutes. The engine heat will help dry moist areas.
8. As a precaution, ride at a slow speed and apply the brakes several times. This will help dry the brakes and restore normal braking performance.

## After Cleaning Lubrication

There are some things you should do just after washing your CRF to help prevent rust and corrosion.

Once your CRF is clean and dry, you should protect any bare steel from rusting by applying a light coating of a rust-inhibitor. Lubricate the drive chain and drive sprocket after removing and thoroughly cleaning in solvent. Be sure the chain is wiped clean and is dry before applying the chain lube.

Follow the suggestions given in the pages of this manual for lubricating items such as the brake and clutch lever pivot points and footpeg pivot pins.

## Aluminum Frame Maintenance

Aluminum corrodes when it comes in contact with dust, mud and road salt.

To remove stains, use Scotch Brite Hand Pad #7447 (maroon) or an equivalent.
Wet the pad and polish the surface using strokes parallel to the length of the frame.

Clean the frame using a wet sponge and a mild detergent, then rinse well with clean water. Dry the frame with a soft clean cloth, using strokes parallel to the length of the frame.

**NOTICE**

*Do not use steel wool to clean the frame as it could damage or discolor the frame surface.*
*Scotch Brite Hand Pad #7447-maroon is for removing stains on the non-coated aluminum frame only.*

## Titanium Fuel Tank Maintenance

The fuel tank is made of titanium material.
To remove mud or dust, use a sponge or soft cloth and a stainless steel kitchen detergent, then rinse well with clean water.
After washing, rinse with plenty of water and dry with a clean cloth.

## Exhaust Pipe and Muffler Maintenance

The exhaust pipe and muffler are stainless steel but may became stained by mud or dust.

To remove mud or dust, use a wet sponge and a liquid kitchen abrasive, then rinse well with clean water. Dry with chamois or a soft towel.

If necessary, remove heat stains by using a commercially available fine texture compound. Then rinse by the same manner as removing mud or dust.

BLANK PAGE

# Adjustments for Competition

This section tells you how to fine tune your CRF for maximum competition performance.

Initial suspension adjustments should be performed after a minimum of 2 hours of easy break-in time.

Optional front and rear suspension springs are available in order to tailor your CRF specifically for your weight, riding style and course conditions.

Follow the instructions given in the rear suspension sag setting section of *Rear Suspension Adjustments* to determine if your combined rider and sprung machine weight (rider fully dressed for competition and machine coolant, oil and fuel levels ready for competition) requires an optional stiffer or softer rear spring. The need for either optional rear spring may need to be balanced by installing the optional fork springs of a similar rate.


Front Suspension Adjustments ..... 140
Front Suspension Air Pressure..... 140
Front Suspension Damping..... 141
Fork Springs..... 141
Fork Oil Adjustment ..... 142
Rear Suspension Adjustments..... 143
Rear Suspension Spring Pre-Load ..... 143
Rear Suspension Damping..... 144
Rear Suspension Race Sag..... 146
Suspension Adjustments for Track Conditions..... 148
Suspension Adjustment Guidelines ..... 149
Tuning Tips ..... 152
Spark Plug Reading ..... 152
Chassis Adjustments ..... 153
Rear End ..... 153
Fork Height/Angle ..... 153
Wheelbase..... 153
Tire Selection for Track Conditions ..... 154
Personal Fit Adjustments ..... 155
Control Positioning..... 155
Handlebar Position, Width & Shape..... 155

# Front Suspension Adjustments

The front suspension can be adjusted for the rider's weight and riding conditions by using one or more of the following methods:

- **Oil volume** — The effects of higher or lower fork oil capacity are only felt during the final 3.9 in (100 mm) of fork travel.
- **Compression damping** — Turning the compression damping adjuster (1) adjusts how quickly the fork compresses.
- **Rebound damping** — Turning the rebound damping adjuster (2) adjusts how quickly the fork extends.
- **Fork springs** — Optional springs are available in softer and stiffer types than the standard rate. (page 178)

The inverted fork on your CRF features sealed damper cartridges with dual (separate air and oil) chambers to prevent aeration. The design also isolates the oil in each fork/damper, which may contain air bubbles and/or metal particles, from the sealed cartridge to provide more consistent damping.

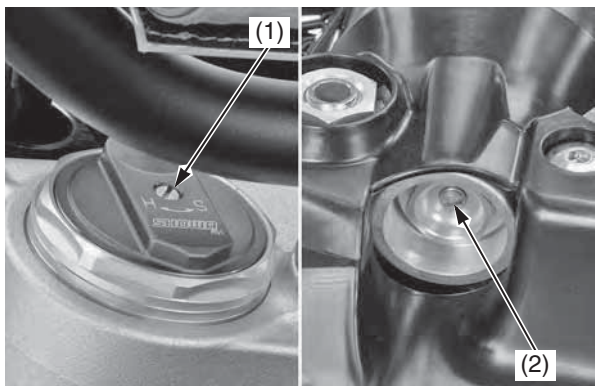


(1) compression damping adjuster
(2) rebound damping adjuster

## Front Suspension Air Pressure

Air is an unstable gas which builds up pressure as it is worked (such as in a fork). Air pressure acts as a progressive spring and affects the entire range of fork travel. This means the fork action on your CRF will get stiffer during a moto. For this reason, release built-up air pressure in the fork legs between moto. Be sure the fork is fully extended with the front tire off the ground when you release the pressure.

The standard air pressure is 0 psi (0 kPa, 0 kgf/cm$^2$). You may relieve accumulated air pressure in the fork legs by using the pressure release screws. The front wheel should be off the ground before you release the pressure. The air pressure should be adjusted according to the altitude and outside temperature.

1. Place an optional workstand under the engine, so that the front wheel is off the ground.
   Do not adjust air pressure with the front wheel on the ground as this will give false pressure readings.
2. Remove the pressure release screw (1).
3. Apply recommended fork oil to a new O-ring (2), and then install a new O-rings.
4. Install and tighten the pressure release screw to the specified torque:
   1.0 lbf·ft (1.3 N·m, 0.1 kgf·m)

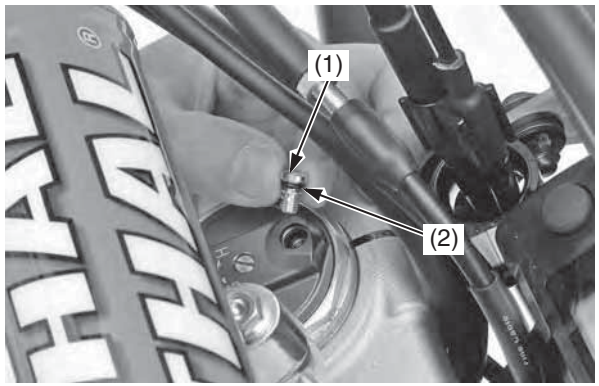


(1) pressure release screw (2) O-ring (new)

## Front Suspension Damping

Compression Damping Adjustment
This adjustment affects how quickly the fork compresses. The fork compression damping adjuster has 16 clicks or more. Turning the compression damping adjuster screw (1) one full turn changes the adjuster 4 clicks. To adjust the adjuster to the standard position, proceed as follows:
Turn the adjuster clockwise (harder) until it will no longer turn (lightly seats). Turn the adjuster counterclockwise (softer) until it clicks. This click is position 1.
The standard position is 5 clicks.
Make sure that both fork legs are adjusted to the same position.

Rebound Damping Adjustment
The fork rebound damping adjuster has 16 clicks or more. Turning the rebound damping adjuster screw (2) one full turn clockwise advances the adjuster 4 clicks. To adjust the rebound damping to the standard setting, proceed as follows:
Turn the adjuster clockwise (harder) until it will no longer turn (lightly seats). Turn the adjuster counterclockwise (softer) until it clicks. This click is position 1.
The standard position is 11 clicks.
Make sure that both fork legs are adjusted to the same position.

**NOTICE**

*Always start with full hard when adjusting damping.*
*Do not turn the adjuster screw more than the given positions or the adjuster may be damaged.*
*Be sure that the compression and rebound adjusters are firmly located in a detent, and not between positions.*
*Both compression and rebound damping can be increased by turning the adjuster clockwise.*

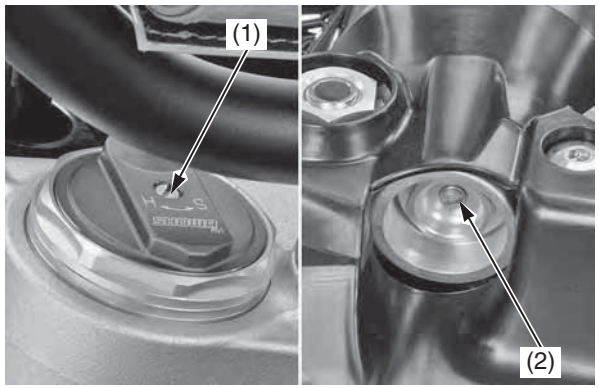


(1) compression damping adjuster screw
(2) rebound damping adjuster screw

## Fork Springs

The fork springs in CRF's are about right for riders weighing between 170 lb (77 kg) and 200 lb (91 kg) (less riding gear). So if you're a heavier rider, you have to go up on the oil capacity or get a stiff spring. Do not use less oil than the minimum specified for each spring or there will be a loss of rebound damping control near full extension. If the fork is too stiff on big bumps, turn the damping adjuster counterclockwise 1-click and lower the oil capacity in increments of 0.2 US oz (5 $cm^3$) in both fork legs until the desired performance is obtained. Do not, however, lower the oil capacity below the minimum oil capacity.

Minimum oil capacity:

| | |
|---|---|
| Standard spring: | 10.3 US oz (304 $cm^3$) |
| Soft spring: | 10.2 US oz (301 $cm^3$) |
| Stiff spring: | 10.1 US oz (298 $cm^3$) |

When adjusting oil capacity, bear in mind that the air in the fork will increase in pressure while riding; therefore, the higher the oil capacity, the higher the eventual pressure of any air in the fork.

## Fork Oil Adjustment

1. Remove the front suspension (page 100).
2. Disassemble the fork outer tube (page 102).
3. Disassemble the fork damper (page 107).

Fork Oil Capacity:

Standard 28.6 lbf/in (5.0 N/mm) Fork Spring

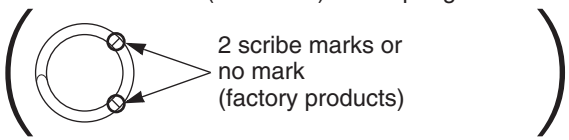


| | | |
|---|---|---|
| Standard oil capacity | 12.2 US oz (361 cm³) | |
| Maximum oil capacity | 13.2 US oz (389 cm³) | Slightly stiffer as it nears full compression. |
| Minimum oil capacity | 10.3 US oz (304 cm³) | Slightly softer as it nears full compression. |

Example: Front fork characteristics when a standard spring

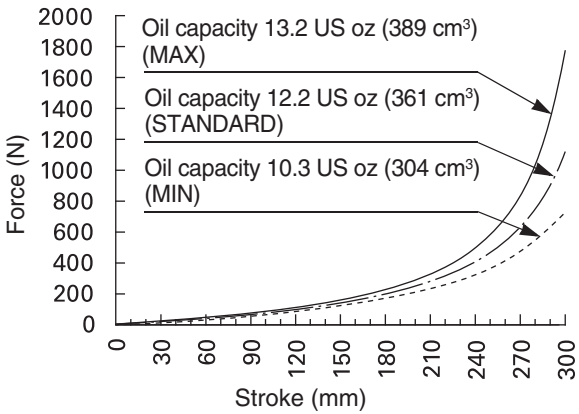


Optional Soft 27.4 lbf/in (4.8 N/mm) Fork Spring

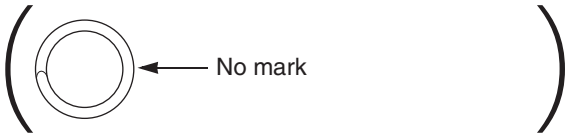


| | | |
|---|---|---|
| Standard oil capacity | 12.1 US oz (359 cm³) | |
| Maximum oil capacity | 13.1 US oz (387 cm³) | Slightly stiffer as it nears full compression. |
| Minimum oil capacity | 10.2 US oz (301 cm³) | Slightly softer as it nears full compression. |

Optional Stiff 29.7 lbf/in (5.2 N/mm) Fork Spring

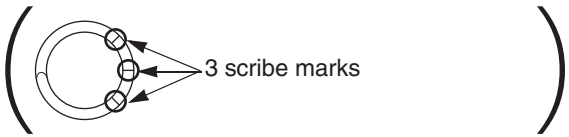


| | | |
|---|---|---|
| Standard oil capacity | 12.0 US oz (355 cm³) | |
| Maximum oil capacity | 13.0 US oz (383 cm³) | Slightly stiffer as it nears full compression. |
| Minimum oil capacity | 10.1 US oz (298 cm³) | Slightly softer as it nears full compression. |

4. Assemble the fork damper (page 112).
5. Refilling the fork oil (page 103).
6. Install the front suspension (page 104).

The rear suspension can be adjusted for the rider's weight and riding conditions by changing the spring pre-load and the rebound and compression damping.

The rear suspension assembly includes a damper unit that contains high pressure nitrogen gas. Do not attempt to disassemble, service, or dispose of the damper; see your dealer. The instructions found in this owner's manual are limited to adjustments of the shock assembly only.

Puncture or exposure to flame may also result in an explosion, causing serious injury.
Service or disposal should only be done by your dealer or a qualified mechanic, equipped with the proper tools, safety equipment and an official Honda Service Manual.

If your CRF is new, put enough part-throttle break-in time (about 1 hour) on it to ensure that the suspension has worked in.

## Rear Suspension Spring Pre-Load

Pre-load should be adjusted when the engine is cold because it is necessary to remove the muffler. An optional pin spanner is available for turning the shock spring lock nut and adjusting nut to adjust spring pre-load.

1. Place your CRF on an optional workstand or equivalent support with the rear wheel off the ground.
2. Remove the subframe (page 49).
3. Check that the spring pre-load is adjusted to the standard length. Adjust as necessary by loosening the shock spring lock nut (1) and turning the adjusting nut (2).
   Each complete turn of the adjusting nut changes the spring length by 0.06 in (1.5 mm).
   After adjustment, hold the adjusting nut and tighten the shock spring lock nut to the specified torque:
   32 lbf·ft (44 N·m, 4.5 kgf·m)

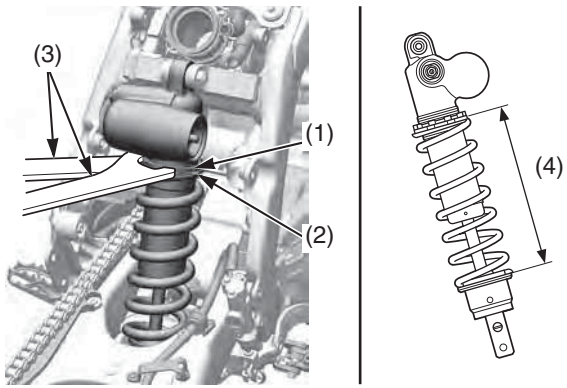


(1) shock spring lock nut
(2) adjusting nut
(3) pin spanners
(4) spring length

Refer to the following pages for the installation procedure of the removed parts:
- air cleaner housing and air cleaner connecting tube: page 53 (Cylinder Head Installation)
- subframe: page 49

To increase spring pre-load
Loosen the shock spring lock nut with the optional pin spanners (3) and turn the adjusting nut to shorten the spring length (4). Do not shorten to less than:
Standard (Medium) spring (296.9 lbf/in (52 N/mm)):
8.94 in (227.0 mm)
Optional Soft spring (285.5 lbf/in (50 N/mm)):
8.94 in (227.0 mm)
Optional Stiff spring (308.3 lbf/in (54 N/mm)):
9.07 in (230.5 mm)

(cont'd)

To decrease spring pre-load
Loosen the shock spring lock nut with the optional pin spanners (3) and turn the adjusting nut to increase the spring length (4). Do not increase to more than:
Standard (Medium) spring (296.9 lbf/in (52 N/mm))/
Optional Stiff spring (308.3 lbf/in (54 N/mm)):
9.41 in (239.0 mm)
Optional Soft spring (285.5 lbf/in (50 N/mm)):
9.21 in (234.0 mm)

Each turn of the adjusting nut changes spring length and spring pre-load. One turn equals: spring length/spring pre-load:
Standard: 0.06 in (1.5 mm)/18 lbf (78 N)

Pin spanners should be used for turning the shock spring lock nut and adjusting nut. See page 178 for optional pin spanners.

Spring pre-load length (Standard (medium) spring)
Standard: 9.21 in (234.0 mm)
Max. : 9.41 in (239.0 mm)
Min. : 8.94 in (227.0 mm)

## Rear Suspension Damping

Compression Damping
Compression damping may be adjusted in two stages with separate adjusters.

The high speed compression damping adjuster (1) is effective when damping adjustment is desired for high speed operation. The low speed compression damping adjuster (2) should be used when damping adjustment is desired at relatively low speeds.

- When adjusting the compression damping adjusters, make sure to use the proper size tool to avoid damage.
- Both the high and low speed compression damping can be increased by turning the appropriate adjuster clockwise.
- Adjust the high speed compression damping adjuster in 1/4 turn increments.
- Be sure the high speed compression adjuster is firmly located in a detent, and not between positions.

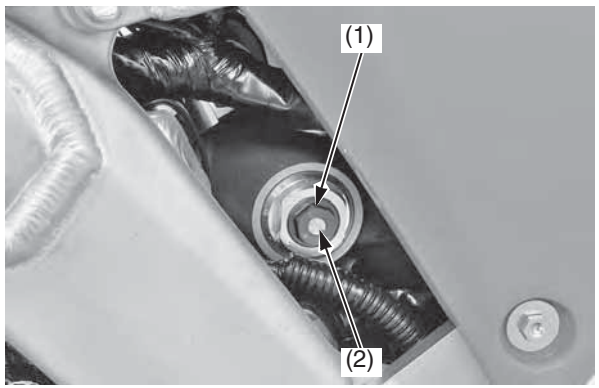


(1) high speed compression damping adjuster
(2) low speed compression damping adjuster

*High Speed Damping:*
The high speed damping can be adjusted by turning the hexagonal portion of the compression damping adjuster.

The high speed compression damping adjuster has 3 1/2 turns or more.

To adjust to the standard position:
1. Turn the adjuster clockwise (harder) until it will no longer turn (lightly seats).
2. Turn the adjuster counterclockwise (softer) 3 1/3 turns. Further turn it by ± 1/4, align the punch mark (3) on the adjuster and the punch mark (4) on the adjuster body.

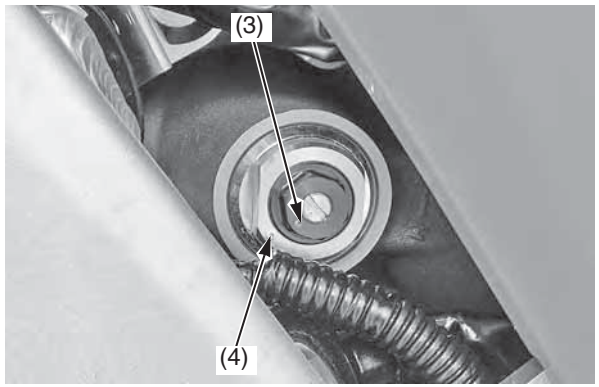


(3) high speed compression damping adjuster punch mark
(4) adjuster body punch mark

*Low Speed Damping:*
The low speed damping can be adjusted by turning the center screw of the compression damping adjuster.

The low speed compression damping adjuster has 13 clicks or more.

Turning the adjuster one full turn clockwise advances the adjuster 4 clicks.

To adjust to the standard position:
1. Turn the adjuster clockwise (harder) until it will no longer turn (lightly seat). Turn the adjuster counterclockwise (softer) until it clicks. This click is position 1.
2. Set the adjuster 11 clicks and adjust it until the punch mark (5) on the adjuster and the punch mark (4) on the adjuster body are aligned.

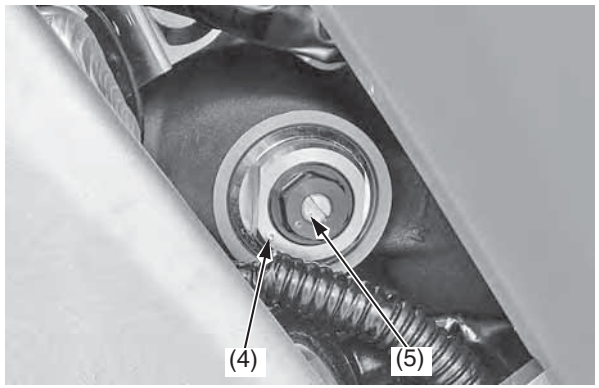


(4) adjuster body punch mark
(5) low speed compression damping adjuster punch mark

Rebound Damping
The rebound damping adjuster (6) is located at the lower end of the rear shock absorber.

It has 17 clicks or more. Turning the adjuster one full turn changes the adjuster 8 clicks.

- When adjusting the rebound damping adjuster, make sure to use the proper size tool to avoid damage.
- Rebound damping can be increased by turning the adjuster clockwise.
- Be sure that the rebound adjuster is firmly located in a detent, and not between positions.

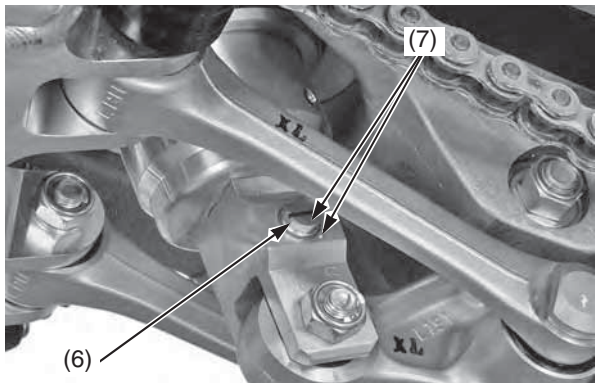


(6) rebound damping adjuster (7) punch marks

To adjust to the standard position:
1. Turn the adjuster clockwise (harder) until it will no longer turn (lightly seat). Turn the adjuster counterclockwise (softer) until it clicks. This click is position 1.
2. Set the adjuster 12 to 15 clicks and adjust it until the punch marks (7) on the adjuster and the rear shock absorber are aligned.

## Rear Suspension Race Sag

Setting the proper race sag (ride height) is very important for competition use.

Race sag refers to the amount of rear wheel travel used by your CRF at rest, ready to ride, with you on the seat. As a general rule of thumb, the race sag dimension should be about one-third of the maximum travel.

On your CRF, ride height is changed by adjusting the rear suspension spring pre-load.

Spring Pre-load & Race Sag Adjustment
The following adjustment procedure establishes the correct starting point for any suspension tuning — the proper rear suspension spring preload adjustment for your specific needs.
Your CRF should be at normal racing weight, including fuel, oil and coolant. You should be wearing all your normal protective apparel. You will need two helpers.

To calculate the proper adjustment, it is necessary to measure between two fixed points — from the center of the seat mounting bolt to the center of the chain adjuster lock nut as illustrated here — for two different situations:

*unloaded:* motorcycle on an optional workstand with rear suspension fully extended, no rider.
*loaded with rider:* motorcycle on ground, with rider.

1. Support your CRF on an optional workstand with the rear wheel off the ground.
2. Measure the *unloaded* dimension.

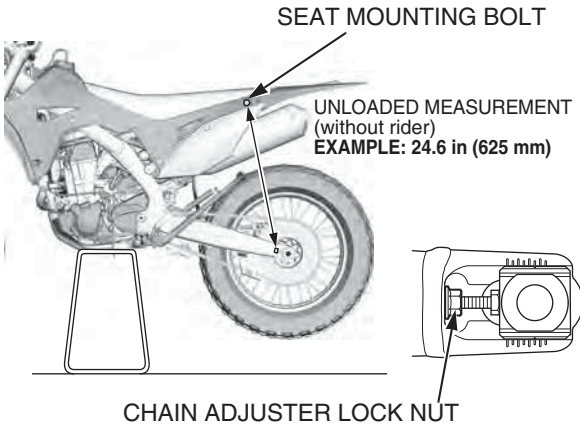


3. Measure the *loaded with rider* dimension. Remove the workstand. With two helpers available, sit as far forward as possible on your CRF's seat, wearing your riding apparel. Ask one helper to steady your CRF perfectly upright so you can put both feet on the pegs. Bounce your weight on the seat a couple of times to help the suspension overcome any situation and settle to a good reference point.

   Ask the other helper to measure the *loaded with rider* dimension.

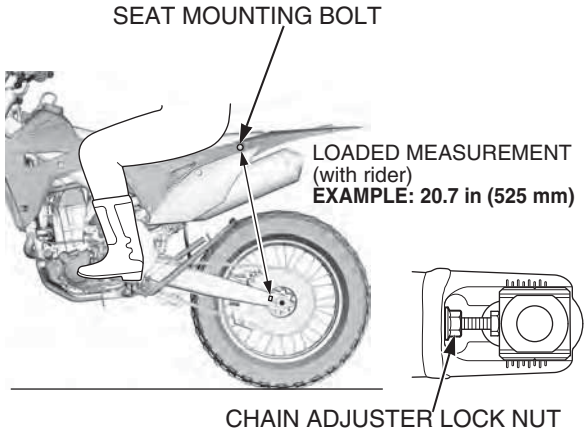


| Example: | |
|---|---|
| Unloaded | = 24.6 in (625 mm) |
| – Loaded | = 20.7 in (525 mm) |
| Race Sag | = 3.9 in (100 mm) |

4. Calculate the *race sag* dimension.
   To do this, subtract the *loaded with rider* dimension (step 3) from the *unloaded* dimension (step 2).
   Standard Race Sag: 4.1 in (105 mm)

   Adjust spring pre-load as necessary to obtain the desired handling results.
   Decreasing the race sag dimension (example: 3.7 in, 95 mm) improves turning ability for tight terrain at the cost of slightly reduced straight line stability.
   Increasing the race sag dimension (example: 4.5 in, 115 mm) may improve stability on faster terrain with less turns, but will reduce turning performance slightly and may upset the balance between the front and rear suspension, producing a harsher ride. This will happen if the adjustment shifts the effective wheel travel toward the more progressive end of its range.

Spring Rates

If you are lighter or heavier than the average rider and cannot set the proper ride height without altering the correct spring pre-load, consider an optional rear shock spring.

A spring that is too soft for your weight forces you to add excessive spring pre-load to get the right race sag and, as a result, the rear end of the motorcycle is raised. This can cause the rear wheel to unload too much in the air and top out as travel rebounds. The rear end may top out from light braking, or kick sideways over lips and square-edged terrain. It may even top-out when you dismount your CRF.

Because of the great absorption quality of the shock bumper rubber, it may be difficult for you to notice when your CRF's suspension is bottoming. Some riders may think the damping or perhaps the leverage ratio is too harsh. In reality, the problem is most likely insufficient spring pre-load or a spring that is too soft. Either situation prevents utilizing the full travel.

Keep in mind that a properly adjusted suspension system may bottom slightly every few minutes at full speed. Adjusting the suspension to avoid this occasional bottoming may cost more in overall suspension performance than it is worth.

A spring that is too stiff for your weight will not allow the rear tire to hook up under acceleration and will pass more bumps on to you.

# Suspension Adjustments for Track Conditions

Soft Surface

On soft ground, sand, and especially mud, consider increasing compression damping front and rear.

Sand often requires a bit more rebound damping to minimize rear end kick. Although sand bumps are usually larger, there's more distance between them, giving the shock more time to recover.

You may want a little bit stiffer front suspension for sand tracks to help keep the front end up and improve straight-line stability.

In a muddy event, stiffer optional springs front and rear may help, especially if you are heavier than the average rider. Your CRF may be under-sprung because of the added weight of the clinging mud. This additional weight may compress the suspension too much and affect traction.

Hard Surface

For a fast, hard track with no large jumps, you can probably run the same spring as normal, but run softer damping both ways-compression and rebound. If you run softer rebound damping, the wheel will follow the rough ground and small bumps much better, and you will hook up better. With a lot of rebound damping, the wheel returns very slowly and doesn't contact the ground quickly enough after each bump. The result is a loss of traction and slower lap times.

Follow the procedures described below to accurately adjust your CRF, using the methods described on pages 140 – 148. Remember to make all adjustments in one-click or 1/12 turn increments. Test ride after each adjustment.

Front Suspension Adjustment
Adjustments for Type of Track

| | |
|---|---|
| Hard-surfaced track | Begin with the standard setting. If the suspension is too stiff/soft, adjust according to the chart below. |
| Sand track | Adjust to a stiffer position.<br>Example: – Turn the compression damping adjuster to a stiffer position.<br>– Install the optional stiff spring. (Adjust compression damping to a softer position and rebound damping to a stiffer position at this time.) |
| Mud track | Adjust to a stiffer position because mud build-up increases your CRF's weight.<br>Example: – Turn the compression damping adjuster to a stiffer setting.<br>– Install the optional stiff spring. |

Adjustments for Too Soft/Stiff Damping

| | Symptom | Action |
|---|---|---|
| Soft suspension | Initial travel too soft:<br>• Steering is too quick.<br>• Front end darts while cornering or riding in a straight line. | – Test stiffer compression damping adjustments in one-click increments.<br>– Test stiffer rebound damping in one-click increments. |
| | Middle travel too soft:<br>• Front end dives when cornering. | If suspension isn't stiff in initial travel:<br>– Test stiffer compression damping adjustments in one-click increments.<br>If initial travel becomes stiff because of the above adjustment:<br>– Reduce the rebound damping in one-click increments.<br>– Test softer compression damping adjustments in one-click increments.<br>If that doesn't solve the problem, install the optional stiff spring. |
| | Final travel too soft:<br>• Bottoms on landings.<br>• Bottoms on large bumps, especially downhill bumps. | If initial and middle travel aren't stiff:<br>– Test stiffer compression damping adjustments in one-click increments.<br>If initial and middle travel are stiff:<br>– Install the optional stiff spring.<br>If initial travel is stiff after installing the optional stiff spring:<br>– Test softer compression damping adjustments in one-click increments.<br>If initial travel is still soft after installing the optional stiff spring:<br>– Test stiffer compression damping adjustments in one-click increments.<br>If final travel is still soft after installing the optional stiff spring:<br>– Increase the fork oil capacity in increments of 0.2 US oz (5 $cm^3$). |
| | Entire travel too soft:<br>• Front end shakes.<br>• Fork bottoms over any type of terrain. | – Install the optional stiff spring.<br>– Test stiffer compression damping adjustments in one-click increments.<br>– Increase rebound damping in one-click increments. |

# Suspension Adjustment Guidelines

| | Symptom | Action |
|---|---|---|
| Stiff suspension | Initial travel too stiff:<br>• Stiff on small bumps while riding at full throttle in a straight line.<br>• Stiff on small cornering bumps.<br>• Front end wanders while riding at full throttle in a straight line. | – Test softer compression damping adjustments in one-click increments.<br>– Reduce the rebound damping adjustments in one-click increments.<br>– Check for dirt in the dust seals. Check the fork oil for any contamination.<br>If the front end dives while cornering after the above adjustment:<br>Reduce the rebound damping in one-click increments. If that doesn't solve the problem, install the optional stiff spring.<br>If the stiff spring makes the suspension too stiff over the full range of travel: test softer compression damping adjustments in one-click increments until the desired compression damping for initial travel is obtained. |
| | Middle travel too stiff:<br>• Stiff on bumps when cornering.<br>• Front end wanders when cornering.<br>• Stiff suspension on bumps, especially downhill bumps.<br>• While braking, front end dives during initial travel, then feels stiff. | If initial travel isn't stiff:<br>– Test stiffer compression damping adjustments in one-click increments. (This should produce smooth fork action from initial to middle travel.)<br>If initial and middle travel is stiff:<br>– Test softer compression damping adjustments in one-click increments.<br>– Reduce the rebound damping in one-click increments. |
| | Final travel too stiff:<br>• Doesn't bottom on landings, but feels stiff.<br>• Stiff on large bumps, especially downhill bumps.<br>• Stiff on large bumps when cornering. | If initial and middle travel aren't stiff:<br>– Test stiffer compression damping adjustments in one-click increments. (This should produce smooth fork action from initial to middle travel.)<br>If final travel is still stiff after the above adjustment, or<br>If initial and middle travel becomes stiff:<br>– Install the optional soft spring.<br>– Test softer compression damping adjustments in one-click increments.<br>If the entire travel feels stiff after the above adjustment:<br>– Test softer compression damping adjustments in one-click increments until the desired initial travel compression damping is obtained.<br>– Lower the oil capacity by 0.2 US oz (5 $cm^3$). |
| | Entire travel too stiff:<br>• Stiff suspension on any type of terrain. | – Test softer compression damping adjustments in one-click increments.<br>– Reduce the rebound damping in one-click increments.<br>– Lower the oil capacity by 0.2 US oz (5 $cm^3$). |

Rear Suspension Adjustment
Adjustments for Type of Track

| | |
|---|---|
| Hard-surfaced track | Begin with the standard settings. If the suspension is too stiff/soft, adjust according to the chart below. |
| Sand track | Lower the rear end (to improve front wheel stability) by increasing Race Sag (reduce spring pre-load).<br>Example: – Turn the compression damping adjuster and, especially, rebound damping adjuster to a stiffer setting.<br>– Increase standard Race Sag (+0.2 to 0.4 in/5 to 10 mm). |
| Mud track | Adjust to a stiffer position because mud build-up increases your CRF's weight.<br>Example: – Adjust the compression and rebound damping adjusters to stiffer settings.<br>– Install an optional stiff spring.<br>– Reduce standard Race Sag (–0.2 to –0.4 in/–5 to –10 mm). |

Symptoms and Adjustment

- Always begin with the standard settings.
- Turn the low speed compression and rebound adjusters in one-click increments, and the high speed compression adjuster in 1/12 turn increments at a time. Adjusting two or more clicks or turns at a time may cause you to pass over the best adjustment. Test ride after each adjustment.
- If, after setting, the suspension feels unusual, find the corresponding symptom in the table and test stiffer or softer compression and/or rebound damping adjustments until the correct settings are obtained as described.

| | Symptom | Action |
|---|---|---|
| Stiff suspension | Suspension feels stiff on small bumps | 1. Test softer low speed compression adjustment.<br>2. If it still feels stiff, further test softer low and high speed compression adjustments simultaneously. |
| | Suspension feels stiff on large bumps | 1. Test softer high speed compression adjustment.<br>2. If it still feels stiff, further test softer low and high speed compression adjustments simultaneously. |
| | Entire travel too stiff | 1. Test softer high and low speed compression adjustments and rebound adjustment simultaneously.<br>2. If it still feels stiff, replace the spring with an optional soft spring and begin with the standard settings to softer settings. |
| Soft suspension | Entire travel too soft | 1. Test stiffer high and low speed compression adjustments simultaneously.<br>2. If it still feels soft, replace the spring with an optional stiff spring and begin with the standard settings to stiffer setting. |
| | Rear end sways | 1. Test stiffer high and low speed compression adjustments and rebound adjustment to stiffer settings simultaneously. |
| Suspension bottoms | Suspension bottoms at landing after jumping | 1. Test stiffer high speed compression adjustment.<br>2. If it still bottoms, test stiffer high and low speed compression adjustments, and replace the spring with a stiff spring (optional) if necessary. |
| | Suspension bottoms after landing | 1. Test stiffer low speed compression adjustment.<br>2. If it still bottoms, test stiffer high and low speed compression adjustments, and replace the spring with a stiff spring (optional) if necessary. |
| | Suspension bottoms after end of continuous bumps | 1. Test softer rebound damping adjustment.<br>2. If it still bottoms, test stiffer high and low speed compression adjustments and softer rebound damping adjustment, and replace the spring with an optional stiff spring if necessary. |

## Spark Plug Reading

Refer to *Spark Plug* on page 80.

The following procedure is recommended.
You may not get an accurate reading if you simply turn off the engine and pull the plug for inspection.

Use a new spark plug. Inspect the plug before installing it.

**NOTICE**

*Using spark plugs with an improper heat range or incorrect reach can cause engine damage.*

Ride for 10 – 15 minutes before taking a plug reading. A new plug will not color immediately.

Before removing the spark plug, clean the spark plug area thoroughly to prevent dirt from entering the cylinder.

To obtain an accurate reading of a new spark plug:
1. Accelerate at full throttle on a straight.
2. Depress and hold the engine stop button and pull the clutch lever in.
3. Coast to a stop.
4. Remove the spark plug.
5. Use a magnifying glass to inspect the spark plug. The porcelain insulator (1) around the center electrode (2) should appear clean and colorless with a gray ring around the center electrode where it exits the porcelain.
   Light gray or white color streaks the porcelain insulator and center electrode indicate lean air-fuel mixture. Wet or black sooty streaks on the porcelain indicate rich air-fuel mixture.

**NOTICE**

*An improperly tightened spark plug can damage the engine. If a plug is too loose, the piston may be damaged. If a plug is too tight, the threads may be damaged.*

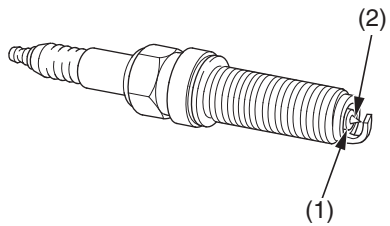


(1) porcelain insulator (2) center electrode

Spark Plug Coloring Guidelines

| Condition | Spark Plug Appearance | Mixture |
|---|---|---|
| Normal | Dark brown to light tan color with dry electrode | correct |
| Overheating (Lean) | Light gray or white color | lean |
| Wet (Rich) | Wet or sooty | rich |

Remember that in addition to improper air-fuel mixture:
- A lean condition can be caused by air leaks in the inlet tract or exhaust system, the passage of too much air because of the use of the wrong air cleaner, or use of a less-restrictive aftermarket exhaust system.
- A rich condition can be caused by a plugged or dirty air cleaner, use of a more-restrictive aftermarket exhaust system, or excessive oil on the air cleaner.
  Excessive smoking will occur.

The following suggestions may improve a specific concern. Subtle changes in overall handling may also be noted.

## Rear End

If you have a problem with rear wheel traction, raise the rear end of your CRF by increasing the rear suspension spring pre-load. Instead of running 3.9 in (100 mm) of sag, you can run 3.5 in (90 mm) so the rear of the motorcycle will sit a little higher. This should produce more traction because of the change to the swingarm and location of your CRF's center of gravity.

If you have a problem with the steering head shaking when you use the front brake hard or if your CRF wants to turn too quickly, lower the rear of the motorcycle by reducing the rear suspension spring pre-load. This will increase fork rake and trail and should improve stability in a straight line. The effective suspension travel will be transferred toward the firmer end of wheel travel.

Keep the race sag adjustment (page 146) in the 3.7 – 4.5 in (95 – 115 mm) range.

## Fork Height/Angle

The position of the fork in the clamp is not adjustable.

Standard Position
The groove (1) in the outer tube is aligned with the top surface of the upper fork bridge (2).

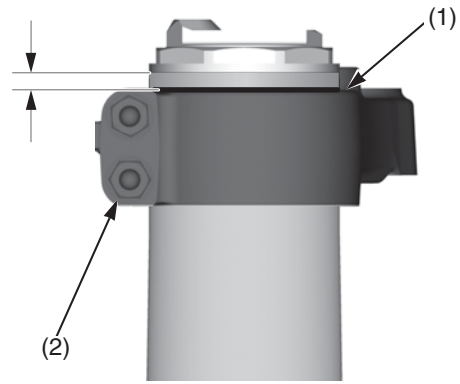


(1) groove
(2) upper fork bridge

## Wheelbase

Adjusting your CRF's wheelbase can offer subtle changes in overall handling. You may adjust wheelbase by adding or removing links on the drive chain. If you change the wheelbase, be sure to recheck race sag and adjust, if necessary.

In the past, a general rule was lengthen the wheelbase to add straight line stability, shorten the wheelbase to improve turning. However, we suggest you do not lengthen the wheelbase of your CRF unless you are racing on a track with more fast sections than normal.

As a general recommendation, keep the wheelbase as short as possible. This positions the wheels closer together, improves turning response, increases weighting (traction) on the rear wheel, and lightens weighting on the front wheel.

With your CRF, you will probably find that the standard setting or a shorter wheelbase will offer more overall benefits.

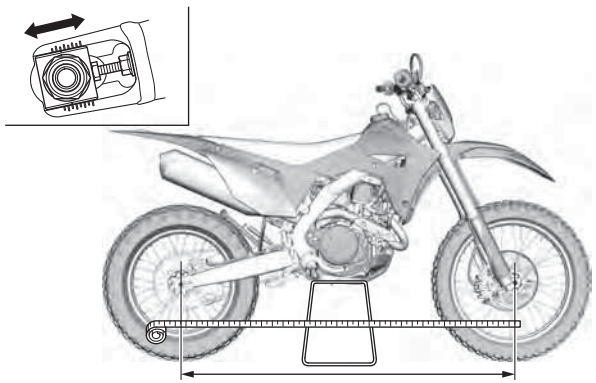

# Tire Selection for Track Conditions

Choosing the correct tire tread pattern and rubber compound can affect your placing in competition. The tires on your CRF offer a “happy medium” for the variety of soil conditions the majority of riders are likely to encounter.

Experienced competitors often switch to tires developed for specific terrain conditions. If you do switch, stay with the factory recommended sizes. Other tires may affect handling or acceleration.

Be aware that tire sizes (width and aspect ratio) do vary from manufacturer to manufacturer or even among tires made by the same manufacturer. Variations in tires, especially the sidewall profile, can change the attitude of your CRF and its handling. Tire variations that raise or lower the rear of your CRF have a more significant effect on handling than variations in front tires which, generally, don’t vary as much.
Often, you can see or feel the change in tire size. Another way to check is to measure the rolling circumference of the old and new tires. A higher profile tire will have a larger rolling circumference.

If you do switch to tires designed for special terrain use, remember they will be less acceptable in other circumstances. For example, an aggressive mud tire will give excellent grip on wet, loamy terrain, but less impressive grip on a hard surface.

If you choose a tire with a sticky compound for added traction, remember that it may transfer additional loads to the transmission because it grips so well, especially when riding in situations that normally place unusual demands on the transmission.

Complete consumer information can be obtained from the various tire manufacturer representatives and dealers.

Some general recommendations for specific terrain follow:

Hard, Slick Soil
Use tires with many relatively short knobs that are close together in order to obtain the largest possible contact patch on the surface. The rubber compound needs to be softer for hard ground in order to hook up, but not so soft that the knobs roll over easily and affect holding a straight line. These tires tend to wear more quickly than standard tires because of the combination of soft rubber and hard terrain.

Muddy Soil
Use a more open tread pattern to avoid clogging. For these conditions, the relatively long knobs will probably be made from a harder rubber compound to reduce any tendency to bend back under acceleration or wear quickly.

Loose, Sandy Soil
Use a tire that is similar in construction to those needed for tacky soil and mud, but with a few more knobs.

The following suggestions may make your ride both more comfortable and more responsive to your control input.

## Control Positioning

- Position the control levers so that you can use them comfortably when seated and standing.
- Adjust the mounting bolt (1) torque of the clutch and front brake lever assemblies so that they can rotate on the handlebar in a fall. If an assembly does not rotate, it may bend or break a control lever. Make sure that the bolts are torqued securely enough to prevent slippage during normal operation.

Apply Pro Honda Hondalock or an equivalent to the threads of these bolts prior to adjustment to help ensure the correct torque is retained. Tighten the top bolts first.

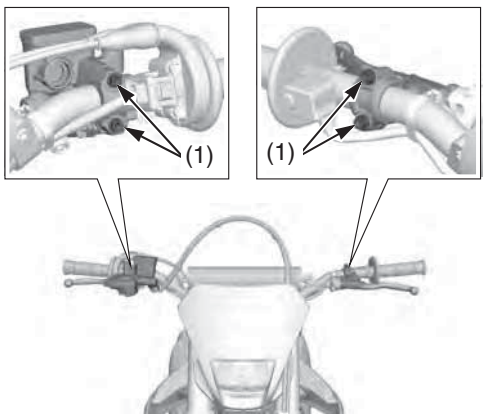


(1) control lever mounting bolts

As an alternative, consider wrapping the handlebar area under the control assemblies with Teflon tape. Then tighten the assemblies to their normal torque. Upon impact, the fully-tightened assemblies should rotate on the Teflon tape.

- Position the shift lever and rear brake pedal so they are close to your boot for rapid access, but not so close that either is depressed when sitting or standing comfortably on your CRF.

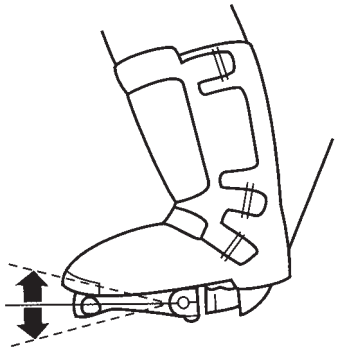

## Handlebar Position, Width & Shape

- Position the handlebar so that both gripping the bar and operating the controls are comfortable while both seated and standing, while riding straight ahead and turning.
  Tighten the forward handlebar upper holder bolts first.
- The handlebar position may be moved backward either 0.1 in (3 mm) (using optional handlebar lower holders) or 0.2 in (6 mm) (by rotating the standard holders 180 degrees). Refer to an official Honda Service Manual for installation instructions. Be sure to check control cable and wiring harness routing after the adjustment.

- Handlebar width can be trimmed with a hacksaw to better suit your particular shoulder width and riding preference. Think this through carefully and cut off just a small amount at a time from both sides equally. It is obviously much easier to make the handlebar narrower than it is to add material.

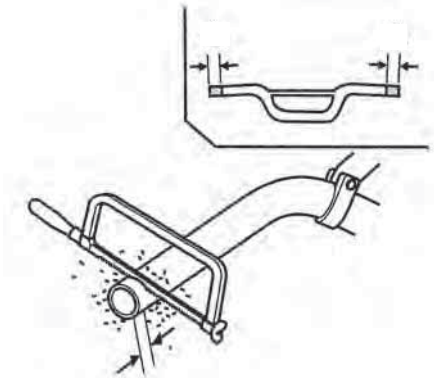

- Chamfer the edges to remove burrs and other irregularities or roughness after sawing the handlebar.
- An alternate handlebar shape, through varying rise or rearward sweep dimensions, will provide further adjustment to riding position and may better suit your particular body size or riding style. Each of the ergonomic dimensions of the machine were determined to suit the greatest possible number of riders based on an average size rider.

BLANK PAGE

# Tips

Here's helpful advice on how to transport and store your CRF, as well as three troubleshooting flow charts.

Transporting Your Motorcycle..... 158
Storing Your Honda ..... 159
Preparation for Storage..... 159
Removal from Storage ..... 159
You & the Environment ..... 160
Troubleshooting..... 161

# Transporting Your Motorcycle

If you use a truck or motorcycle trailer to transport your CRF, we recommend that you follow these guidelines:

- Use a loading ramp.
- Relieve the fuel pressure (page 45) and drain the fuel from the fuel tank into an approved gasoline container.
- Secure the motorcycle in an upright position, using motorcycle tie-down straps. Avoid using rope, which can loosen and allow the motorcycle to fall over.

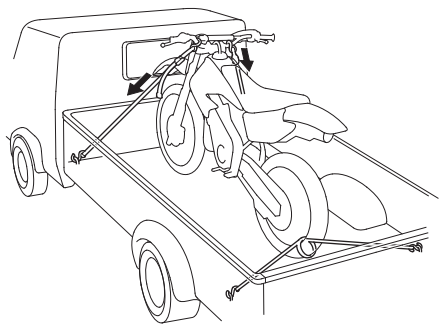

To secure your CRF, brace the front wheel against the front of the truck bed or trailer rail.
Attach the lower ends of two straps to the tie-down hooks on truck bed or trailer rail. Attach the upper ends of the straps to the handlebar (one on the right side, the other on the left), close to the fork.

Check that the tie-down straps do not contact any control cables or electrical wiring.

Tighten both straps until the front suspension is compressed about half-way. Too much pressure is unnecessary and could damage the fork seals.

Use another tie-down strap to keep the rear of the motorcycle from moving.

We recommend that you do not transport your CRF on its side. This can damage the motorcycle, and leaking gasoline could be a hazard.

If you won't be riding for an extended period, such as during the winter, thoroughly inspect your CRF and correct any problem before storing it. That way, needed repairs won't be forgotten and it will be easier to get your CRF running again.

To reduce or prevent deterioration that can occur during storage, also follow the following procedures.

## Preparation for Storage

1. Completely clean all parts of your CRF. If your CRF has been exposed to sea air or salt water, wash it down with fresh water and wipe dry.
2. Change the engine oil and filter (page 64).
3. Remove the engine guard A bolts/washers (1), B bolt/washer (2) and engine guard (3).

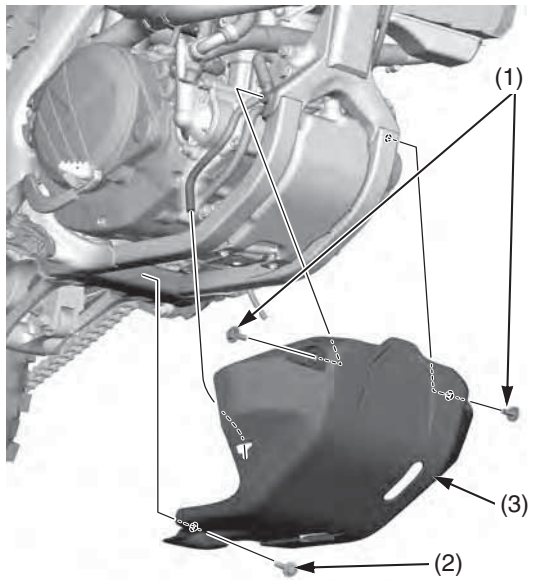


(1) engine guard A bolts/washers
(2) engine guard B bolt/washer
(3) engine guard

4. Remove the radiator cap and coolant drain bolt (4) and sealing washer (5) at the water pump cover (6) to drain coolant.
   After the coolant has been completely drained, reinstall the drain bolt with a new sealing washer and radiator cap.
   Tighten the drain bolt to the specified torque:
   7 lbf·ft (10 N·m, 1.0 kgf·m)

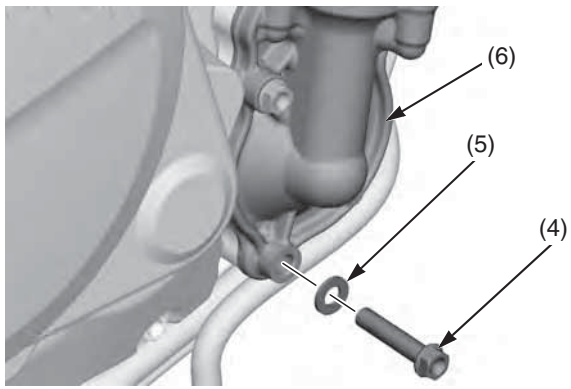


(4) coolant drain bolt
(5) sealing washer (new)
(6) water pump cover

5. Install the engine guard (3), then tighten the engine guard A bolts/washers (1), B bolt/washer (2) to the specified torque:
   7 lbf·ft (10 N·m, 1.0 kgf·m)
6. Lubricate the drive chain.
7. Relieve the fuel pressure (page 45) and drain the fuel from the fuel tank into an approved gasoline container.
8. Remove the battery.
   Store in an area protected from freezing temperatures and direct sunlight. Slow charge the battery (page 134) once a month.
9. Inflate the tires to their recommended pressures.
10. Place your CRF on an optional workstand or equivalent to raise both tires off the ground.
11. Stuff a rag into the muffler outlet. Then tie a plastic bag over the end of the muffler to prevent moisture from entering.
12. Store your CRF in an unheated area, free of dampness, away from sunlight, with a minimum of daily temperature variation.
13. Cover your CRF with a porous material. Avoid using plastic or similar non-breathing, coated materials that restrict air flow and allow heat and moisture to accumulate.

## Removal from Storage

1. Uncover and clean your CRF.
   Change the engine oil if more than 4 months have passed since the start of storage.
2. Uncover the end of the muffler and remove the rag from the muffler outlet.
3. Fill the fuel tank with the recommended fuel (page 54).
4. Charge the battery (page 134) as required. Install the battery.
5. Pour a fresh recommended coolant mixture slowly into the radiator filler hole up to the filler neck (page 66).
   Capacity:
   1.31 US qt (1.24 ℓ) after disassembly
   1.20 US qt (1.14 ℓ) after draining

   Remove the radiator reserve tank cap and fill the reserve tank to the upper level line. Bleed air from the system (page 67).
6. Increase the fuel pressure (page 62).
7. Perform all maintenance checks (page 17).

# You & the Environment

Owning and riding a motorcycle can be enjoyable, but you must do your part to protect nature. When you show respect for the land, wildlife, and other people, you also help preserve the sport of off-road riding.

Following are tips on how you can be an environmentally responsible motorcycle owner.

- **Choose Sensible Cleaners.** Use a biodegradable detergent when you wash your CRF. Avoid aerosol spray cleaners that contain chlorofluorocarbons (CFCs) which damage the atmosphere's protective ozone layer. Don't throw cleaning solvents away; see the following guidelines for proper disposal.

- **Recycle Wastes.** It's illegal and thoughtless to put used engine oil in the trash, down a drain, or on the ground. Used oil, gasoline, coolant, and cleaning solvents contain poisons that can hurt refuse workers and contaminate our drinking water, lakes, rivers, and oceans.
  Before changing your oil, make sure you have the proper containers. Put oil and other toxic wastes in separate sealed containers and take them to a recycling center. Call your local or state office of public works or environmental services to find a recycling center in your area and get instructions on how to dispose of non recyclable wastes.

**NOTICE**

*Improper disposal of drained fluids is harmful to the environment.*

The items that are serviceable using this Manual are followed by the page number reference in parenthesis. The items that require use of an official Honda Service Manual are followed by an asterisk (*).

## ENGINE DOES NOT START OR IS HARD TO START

Operate the start button with the throttle grip in fully closed position (page 21).

| CHECK | | POSSIBLE CAUSES |
|---|---|---|
| 1. Check the starter motor* | DOES NOT TURN | • Loose or disconnected battery terminals (P.134)<br>• Blown main fuse (P.164)<br>• Weak battery (P.134, 165)<br>• Faulty starter relay switch or starter motor*<br>• Faulty start button*<br>• Faulty clutch switch<br>• Faulty CKP sensor* |
| TURN ↓ | | |
| 2. Check the starter/ ignition relay* | INCORRECT | • Faulty starter/ignition relay |
| CORRECT ↓ | | |
| 3. Check the spark plug condition (P.80) | INCORRECT | • Incorrect spark plug heat range<br>• Incorrect spark plug gap<br>• Dirty air cleaner element |
| CORRECT ↓ | | |
| 4. Try spark test* | WEAK OR NO SPARK | • Faulty spark plug (P.80)<br>• Fouled spark plug (P.80)<br>• Faulty ECM*<br>• Broken or shorted spark plug wire<br>• Faulty alternator*<br>• Faulty ignition coil*<br>• Faulty engine stop button*<br>• Loose or disconnected ignition system wires<br>• Faulty CKP sensor*<br>• Faulty regulator/rectifier* |
| GOOD SPARK ↓ | | |
| 5. Check the PGM-FI system (P.10) | INCORRECT | • Faulty PGM-FI system |
| CORRECT ↓ | | |
| 6. Check the fuel pump operation and inspect the fuel flow* | INCORRECT | • Faulty fuel pump*<br>• Clogged fuel pump filter |
| CORRECT ↓ | | |
| 7. Check the fuel injector operating sound | INCORRECT | • Faulty PGM-FI system<br>• Faulty fuel injector |
| CORRECT ↓ | | |
| 8. Test cylinder compression* | LOW | • Valve clearance too small<br>• Valve stuck open<br>• Worn cylinder and piston ring*<br>• Damaged cylinder head gasket<br>• Improper valve timing*<br>• Seized valve |
| CORRECT ↓ | | |
| 9. Start by following normal starting procedure | ENGINE STARTS BUT SOON STOPS | • Insulator leaking<br>• Improper ignition timing (Faulty ECM or CKP sensor)*<br>• Fast idle knob stuck open or damaged<br>• Fuel contaminated |

## ENGINE LACKS POWER

| CHECK | | POSSIBLE CAUSES |
|---|---|---|
| 1. Check the wheel spin smoothness | INCORRECT | • Brake dragging<br>• Worn or damaged wheel bearings<br>• Bent axle shaft<br>• Drive chain too tight |
| CORRECT ↓ | | |
| 2. Check the tire pressure (P.121) | INCORRECT | • Faulty valve core<br>• Punctured tire |
| CORRECT ↓ | | |
| 3. Check the engine speed change accordingly when clutch is engaged* | NO GOOD | • Clutch slipping<br>• Improperly adjusted clutch lever freeplay (P.75)<br>• Worn clutch discs/plates (P.78)<br>• Warped clutch discs/ plates (P.78)<br>• Weak clutch springs*<br>• Sticking clutch lifter<br>• Additive in engine oil |
| GOOD ↓ | | |
| 4. Check the engine speed increase | NO GOOD | • Dirty air cleaner element<br>• Clogged muffler<br>• Fast idle knob stuck open or damaged<br>• Restricted fuel fill cap breather tube<br>• Restricted fuel flow |
| GOOD ↓ | | |
| 5. Check the engine knocking when accelerate or run the engine at high speed | YES | • Worn piston and cylinder*<br>• Use of poor quality fuel<br>• Excessive carbon build-up in combustion chamber<br>• Ignition timing too advance (Faulty ECM)*<br>• Lean fuel mixture |
| NO ↓ | | |
| 6. Check the ignition timing* | INCORRECT | • Faulty ECM*<br>• Faulty CKP sensor* |
| CORRECT ↓ | | |
| 7. Test cylinder compression* | LOW | • Valve clearance too small<br>• Valve stuck open<br>• Worn cylinder and piston ring*<br>• Damaged cylinder head gasket<br>• Improper valve timing*<br>• Faulty decompressor system* |
| CORRECT ↓ | | |
| 8. Check the PGM-FI system (P.10) | INCORRECT | • Faulty PGM-FI system |
| CORRECT ↓ | | |
| 9. Check the fuel pump operation and inspect the fuel flow* | INCORRECT | • Faulty fuel pump unit*<br>• Clogged fuel pump filter |
| CORRECT ↓ | | |
| 10. Check the spark plug condition (P.80) | INCORRECT | • Incorrect spark plug<br>• Incorrect spark plug gap<br>• Dirty air cleaner element |
| CORRECT ↓ | | |
| 11. Check the engine oil level and condition (P.64) | INCORRECT | • Engine oil level too high<br>• Engine oil level too low<br>• Contaminated engine oil |
| CORRECT ↓ | | |
| 12. Remove the cylinder head cover and inspect lubrication | INCORRECT | • Faulty oil pump*<br>• Faulty pressure relief valve*<br>• Clogged oil passage*<br>• Clogged oil strainer screen* |

(cont'd)

## POOR PERFORMANCE AT LOW AND IDLE SPEED

| CHECK | | POSSIBLE CAUSES |
|---|---|---|
| 1. Check the spark plug condition (P.80) | INCORRECT | • Incorrect spark plug heat range<br>• Incorrect spark plug gap<br>• Plug not serviced frequently enough |
| CORRECT ↓ | | |
| 2. Check the ignition timing* | INCORRECT | • Faulty ECM*<br>• Faulty CKP sensor* |
| CORRECT ↓ | | |
| 3. Check the PGM-FI system (P.10) | INCORRECT | • Faulty PGM-FI system |
| CORRECT ↓ | | |
| 4. Check the fuel pump operation and inspect the fuel flow* | INCORRECT | • Faulty fuel pump unit*<br>• Clogged fuel pump filter |
| CORRECT ↓ | | |
| 5. Check the insulator for leaks | INCORRECT | • Loose insulator<br>• Damaged insulator |
| CORRECT ↓ | | |
| 6. Check the valve clearance (P.81) | INCORRECT | • Faulty valve clearance<br>• Faulty valve*<br>• Faulty valve seat*<br>• Faulty camshaft* |
| CORRECT ↓ | | |
| 7. Try spark test* | WEAK OR INTERMITTENT SPARK | • Faulty, carbon or wet fouled spark plug (P.80)<br>• Faulty ECM*<br>• Faulty alternator*<br>• Faulty ignition coil*<br>• Broken or shorted spark plug wire.<br>• Faulty CKP sensor*<br>• Loose or disconnected ignition system wires<br>• Faulty engine stop button*<br>• Faulty regulator/rectifier* |

## POOR PERFORMANCE AT HIGH SPEED

| CHECK | | POSSIBLE CAUSES |
|---|---|---|
| 1. Check the ignition timing* | INCORRECT | • Faulty ECM*<br>• Faulty CKP sensor* |
| CORRECT ↓ | | |
| 2. Check the air cleaner (P.69) | DIRTY | • Not cleaned frequently enough |
| AIR CLEANER NOT DIRTY ↓ | | |
| 3. Check the PGM-FI system (P.10) | INCORRECT | • Faulty PGM-FI system |
| CORRECT ↓ | | |
| 4. Check the fuel pump operation and inspect the fuel flow* | INCORRECT | • Faulty fuel pump unit*<br>• Clogged fuel pump filter |
| CORRECT ↓ | | |
| 5. Check the valve timing | INCORRECT | • Camshaft not installed properly (P.86) |
| CORRECT ↓ | | |
| 6. Check the valve clearance (P.81) | INCORRECT | • Faulty valve clearance<br>• Faulty valve*<br>• Faulty valve seat*<br>• Faulty camshaft* |
| CORRECT ↓ | | |
| 7. Check the valve springs* | WEAR | • Faulty valve springs* |
| GOOD ↓ | | |
| 8. Try spark test* | WEAK OR INTERMITTENT SPARK | • Faulty, carbon or wet fouled spark plug (P.80)<br>• Faulty ECM*<br>• Faulty alternator*<br>• Faulty ignition coil*<br>• Broken or shorted spark plug wire.<br>• Faulty CKP sensor*<br>• Loose or disconnected ignition system wires<br>• Faulty engine stop button*<br>• Faulty regulator/rectifier* |
| GOOD SPARK ↓ | | |
| 9. Remove and inspect the cam lobe height* | WORN | • Faulty camshaft* |
| CORRECT | | |

## POOR HANDLING

Steering is heavy
- Steering stem adjusting nut too tight*
- Damaged steering head bearings

Either wheel is wobbling
- Excessive wheel bearing play
- Bent rim
- Improperly installed wheel hub
- Excessively worn swingarm pivot bearings
- Bent frame

The motorcycle pulls to one side
- Front and rear wheels not aligned
- Bent fork
- Bent swingarm
- Bent axle shaft
- Bent frame

# Taking Care of the Unexpected

This section gives practical advice to help you solve problems.

If a Fuse Blows ..... 164
If Your Battery Is Low (or Dead) ..... 165
If You Crash..... 166

# If a Fuse Blows

All of the electrical circuits on your CRF have a fuse to protect them from damage caused by excess current flow (short circuit or overload).

If something electrical on your CRF stops working, the first thing you should check for is a blown fuse (1). Determine from the chart on the circuit fuse box cover which fuse or fuses control that component. Check the fuse before looking elsewhere for another possible cause of the problem. Replace a blown fuse and check component operation.

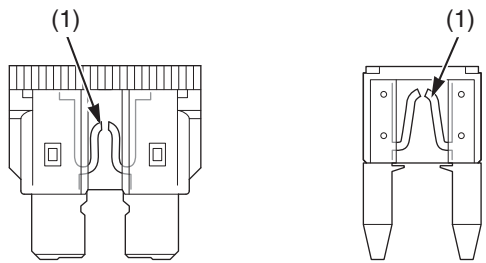


(1) blown fuse

The main fuse and circuit fuses are located on the behind the left side cover.

Recommended Fuses

| | |
|---|---|
| Main fuse | 20 A |
| Other fuses | 10 A |

1. To prevent an accidental short circuit, stop the engine.
2. Remove the seat (page 43).
3. Remove the left side cover (page 44).
4. Open the rubber fuse box cover (2) and fuse box cover (3).
5. Pull out the fuses one by one to check for a blown fuse. Always replace a blown fuse with a spare fuse (4) of the same rating.

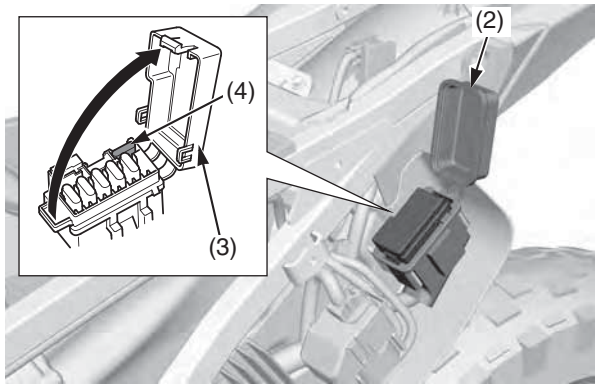


(2) rubber fuse box cover
(3) fuse box cover
(4) spare fuse

6. Close the fuse box cover and rubber fuse box cover.
7. Install the left side cover (page 44).
8. Install the seat (page 43).

If you do not have a replacement fuse with the proper rating for the circuit, install one with a lower rating.

**NOTICE**

*Replacing a fuse with one that has a higher rating greatly increases the chance of damage to the electrical system.*

*Main Fuse Access:*

1. To prevent an accidental short circuit, stop the engine.
2. Remove the seat (page 43).
3. Remove the left side cover (page 44).
4. Remove the start magnetic switch cover (5).
5. Pull out the main fuse (6) to check for a blown fuse. Always replace a blown fuse with a spare main fuse (7).

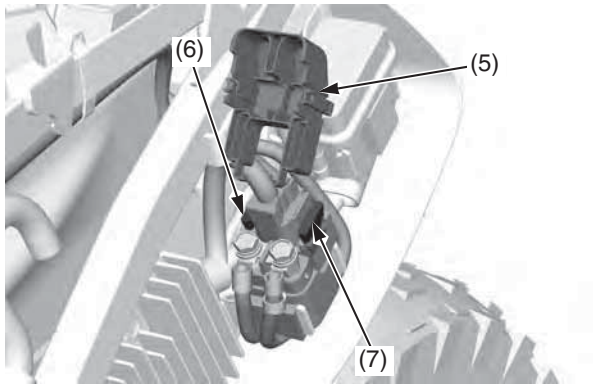


(5) start magnetic switch cover
(6) main fuse
(7) spare main fuse

6. Close the start magnetic switch cover.
7. Install the left side cover (page 44).
8. Install the seat (page 43).

If you do not have a replacement fuse with the proper rating for the circuit, install one with a lower rating.

**NOTICE**

*Replacing a fuse with one that has a higher rating greatly increases the chance of damage to the electrical system.*

If you replace a blown fuse with a spare fuse that has a lower rating, replace the fuse with the correct rating as soon as you can. Also remember to replace the spare fuse that was installed.

If the replacement fuse of the same rating burns out in a short time, there is probably a serious electrical problem on your motorcycle.
Leave the blown fuse in that circuit and have your motorcycle checked by your dealer.

If an overvoltage, overcurrent, or short circuit is applied, the battery fuse may blow.

Do not jump-start as this can damage your CRF's electrical system and battery.

Bump starting is not recommended.

Check the battery voltage using a digital multi meter with the cable connected.

Below 1V: The battery has failed; replace the battery.

Between 1V and 8V: The battery may have failed; charge the battery using a lithium-ion (li-ion) battery charger and then recheck, see page 134 Battery Charging. If you can't charge the battery or it appears unable to hold a charge, see your dealer.

# If You Crash

Personal safety is your first priority after a crash. If you or anyone else has been injured, take time to assess the severity of the injuries and whether it is safe to continue riding. If you cannot ride safely, send someone for help. Do not ride if you will risk further injury.

If you decide that you are capable of riding safely, first evaluate the condition of your motorcycle. If the engine is still running, turn it off and look it over carefully; inspect it for fluid leaks, check the tightness of critical nuts and bolts, and secure such parts as the handlebar, control levers, brakes, and wheels.

If there is minor damage, or you are unsure about possible damage but decide to try riding the motorcycle back to your base, ride slowly and cautiously.

# Technical Information

This section contains dimensions, capacities, and other technical data.


Vehicle Identification....168
Serial Numbers....168
Specifications....169
Torque Specifications....170
Nuts, Bolts, Fasteners....170
Emission Control Systems....173
Oxygenated Fuels....175
Competition Logbook....176
Optional Parts List....178
Spare Parts & Equipment....179
Spare Parts....179
General Tools....179
Honda Special Tools....179
Chemical Products....179
Other Products....179
Wiring Diagram....180

## Serial Numbers

The VIN and engine serial number are required when you register your CRF. They may also be required when ordering replacement parts. You may record these numbers in the Quick Reference section at the rear of this manual.

The VIN (vehicle identification number) (1) is stamped on the right side of the steering head.

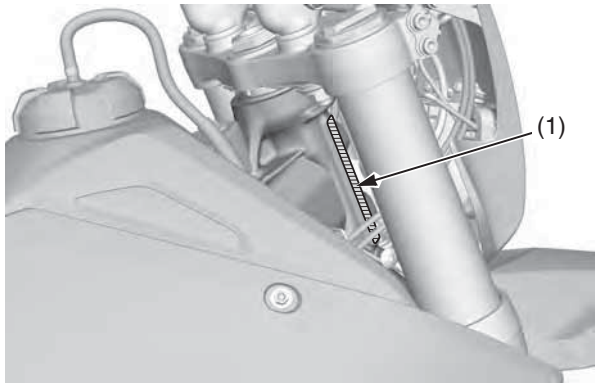


(1) VIN

The engine number (2) is stamped on the right crankcase.

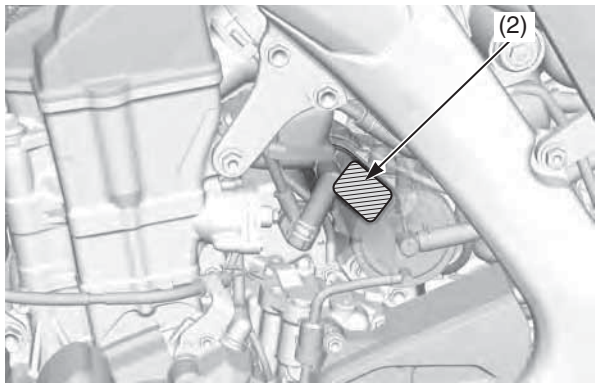


(2) engine number

| Item | English | Metric |
|---|---|---|
| **Dimension** | | |
| Overall length | 86.3 in | 2,191 mm |
| Overall width | 32.2 in | 818 mm |
| Overall height | 50.3 in | 1,278 mm |
| Wheelbase | 58.7 in | 1,491 mm |
| Seat height | 37.9 in | 963 mm |
| Footpeg height | 16.4 in | 417 mm |
| Ground clearance | 13.1 in | 333 mm |
| **Frame** | | |
| Type | Twin tube | |
| F. suspension | Telescopic fork, travel 10.55 in (268 mm) stroke 12.01 in (305 mm) | |
| R. suspension | Pro-link, travel 11.81 in (300 mm) | |
| Tire size, front | 80/100-21 51M | |
| | DUNLOP | MX52F |
| Tire size, rear | 110/100-18 64M | |
| | DUNLOP | MX52 |
| Tire type | bias-ply, tube | |
| Tire pressure, front (cold) | 22 psi (150 kPa, 1.50 kgf/cm$^2$) | |
| Tire pressure, rear (cold) | 22 psi (150 kPa, 1.50 kgf/cm$^2$) | |
| F. brake, swept area | Single disc brake 56.0 in$^2$ (361.0 cm$^2$) | |
| R. brake, swept area | Single disc brake 60.5 in$^2$ (390.3 cm$^2$) | |
| Fuel | unleaded gasoline, pump octane number of 91 or higher | |
| Fuel tank capacity | 2.01 US gal | 7.6 ℓ |
| Caster angle | 27°36’ | |
| Trail length | 5.6 in | 143 mm |
| Fork oil capacity (except damper) | 12.2 US oz | 361 cm$^3$ |
| Fork oil capacity (damper) | 8.2 US oz | 243 cm$^3$ |

| Item | English | Metric |
|---|---|---|
| **Engine** | | |
| Type | Liquid cooled, 4-stroke | |
| Cylinder arrangement | Single 10° inclined from vertical | |
| Bore and stroke | 3.78 x 2.44 in | 96.0 x 62.1mm |
| Displacement | 27.4 cu-in | 449 cm$^3$ |
| Compression ratio | 12.0 : 1 | |
| Valve clearance (cold) | Intake: 0.004 ± 0.001 in (0.11 ± 0.03 mm)<br>Exhaust:0.011 ± 0.001 in (0.28 ± 0.03 mm) | |
| Engine oil capacity | | |
| after draining | 1.16 US qt | 1.10 ℓ |
| after draining and oil filter change | 1.22 US qt | 1.15 ℓ |
| after disassembly | 1.53 US qt | 1.45 ℓ |
| **Throttle body** | | |
| Identification number | GQ2HA | |
| Idle speed | 1,800 ± 100 rpm | |
| **Cooling system** | | |
| Cooling capacity | | |
| after draining | 1.20 US qt | 1.14 ℓ |
| after disassembly | 1.31 US qt | 1.24 ℓ |

| Item | English | Metric |
|---|---|---|
| **Drive train** | | |
| Clutch type | Wet, multi-plate type | |
| Transmission | 6-speed, constant mesh | |
| Primary reduction | 2.357 | |
| Gear ratio I | 2.357 | |
| Gear ratio II | 1.705 | |
| Gear ratio III | 1.300 | |
| Gear ratio IV | 1.090 | |
| Gear ratio V | 0.916 | |
| Gear ratio VI | 0.793 | |
| Final reduction | 3.923 | |
| Gear shift pattern | Left foot-operated return system 1-N-2-3-4-5-6 | |
| **Electrical** | | |
| Battery | HY93-C lithium-ion (li-ion) 12V-4.5 Ah (20HR) | |
| Ignition | ECM | |
| Starting system | Electric | |
| Spark plug | NGK | |
| Standard | SILMAR9A-9S | |
| For extended high speed riding | NGK SILMAR10A-9S | |
| Spark plug gap | 0.031 – 0.035 in (0.8 – 0.9 mm) | |
| **Lights** | | |
| headlight | 12 V 35 W | |
| taillight | LED | |
| **Fuse** | | |
| Main fuse | 20 A | |
| Other fuse | 10 A | |

## Nuts, Bolts, Fasteners

Check and tighten nuts, bolts, and fasteners before every outing.

LEFT SIDE

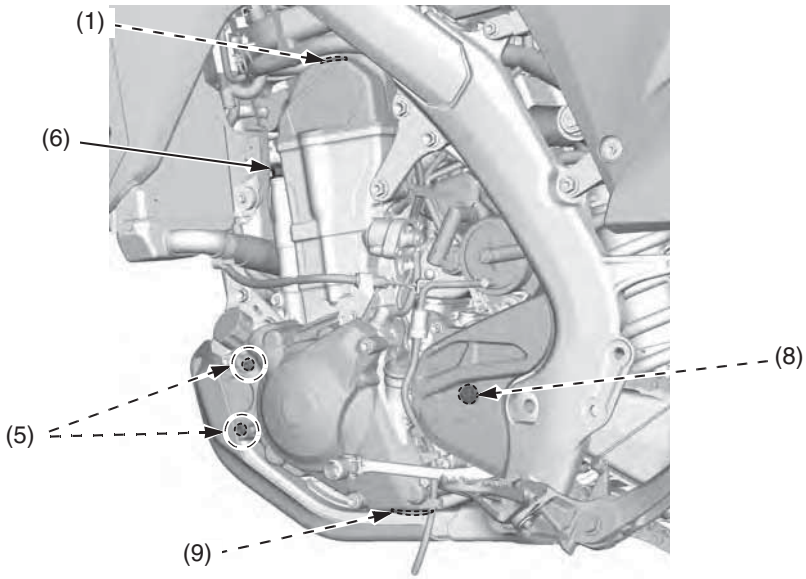


RIGHT SIDE

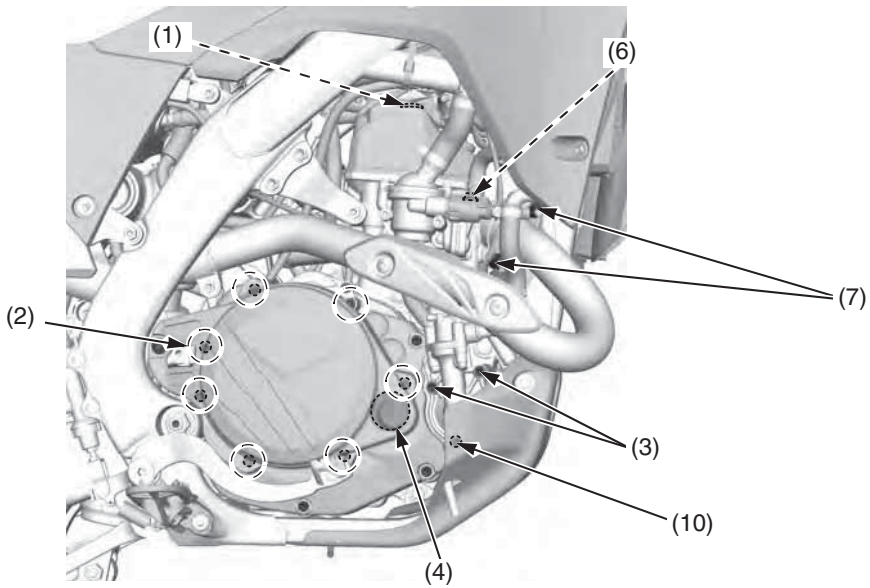


**ENGINE**

| | Item | Torque | | | Remarks |
|---|---|---|---|---|---|
| | | lbf·ft | N·m | kgf·m | |
| 1 | Cylinder head cover socket bolts | 7 | 10 | 1.0 | |
| 2 | Clutch cover bolts | 7 | 10 | 1.0 | |
| 3 | Water pump cover bolts | 7 | 10 | 1.0 | |
| 4 | Crankshaft hole cap | 11 | 15 | 1.5 | NOTE 1 |
| 5 | Oil filter cover bolts | 7 | 10 | 1.0 | |
| 6 | Cylinder head bolts | 37 | 50 | 5.1 | NOTE 2 |
| 7 | Exhaust pipe joint nuts | 16 | 22 | 2.2 | |
| 8 | Drive sprocket bolt | 23 | 31 | 3.2 | |
| 9 | Engine oil drain bolt | 13 | 18 | 1.8 | NOTE 2 |
| 10 | Coolant drain bolt | 7 | 10 | 1.0 | |

NOTES: 1. Apply grease to the threads.
2. Apply engine oil to the threads and seating surface.

LEFT SIDE

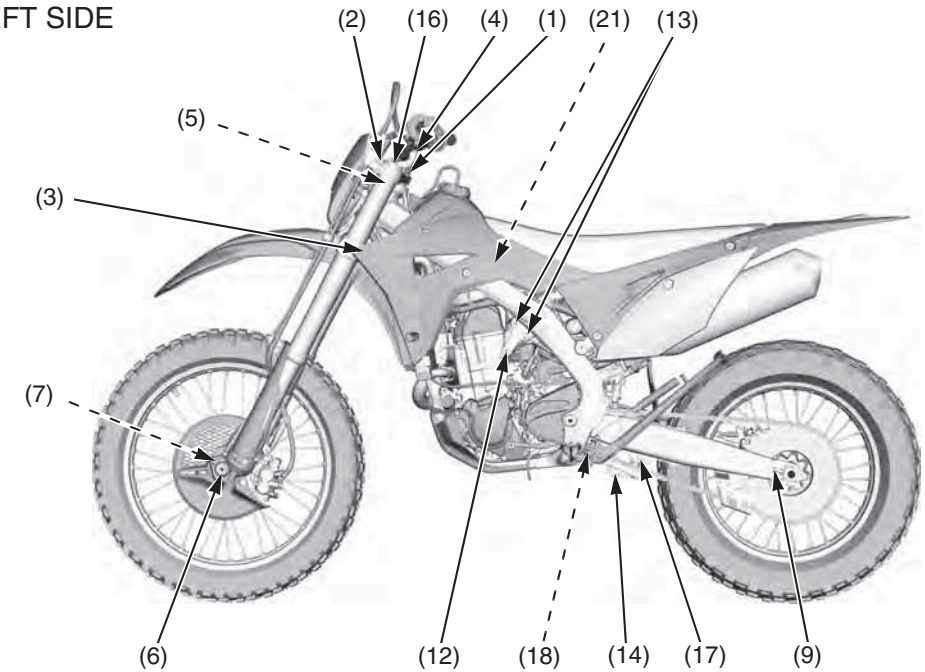


RIGHT SIDE

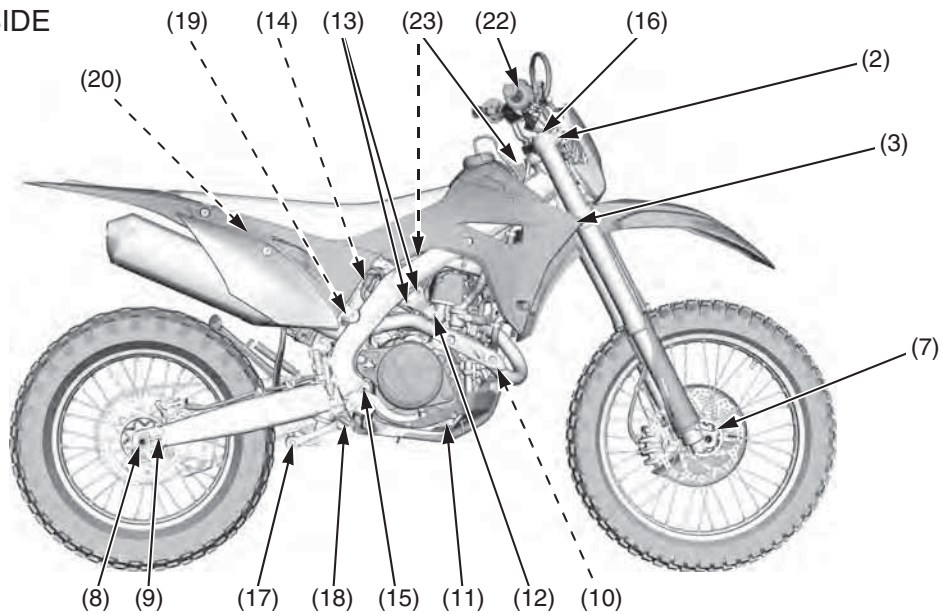


**FRAME**

| | Item | Torque | | | Remarks |
|---|---|---|---|---|---|
| | | lbf·ft | N·m | kgf·m | |
| 1 | Steering stem nut | 80 | 108 | 11.0 | |
| 2 | Fork bridge upper pinch bolts | 16 | 22 | 2.2 | |
| 3 | Fork bridge lower pinch bolts | 15 | 20 | 2.0 | |
| 4 | Handlebar upper holder bolts | 16 | 22 | 2.2 | |
| 5 | Handlebar lower holder nuts | 32 | 44 | 4.5 | NOTE 1 |
| 6 | Front axle nut | 65 | 88 | 9.0 | |
| 7 | Axle pinch bolts | 15 | 20 | 2.0 | |
| 8 | Rear axle nut | 94 | 128 | 13.1 | NOTE 1 |
| 9 | Chain adjuster lock nuts | 20 | 27 | 2.8 | NOTE 2 |
| 10 | Front engine hanger nuts | 40 | 54 | 5.5 | |
| | Front engine hanger plate nuts | 19 | 26 | 2.7 | |
| 11 | Lower engine hanger nut | 40 | 54 | 5.5 | |
| 12 | Cylinder head hanger bolts | 40 | 54 | 5.5 | |
| 13 | Cylinder head hanger plate bolts | 24 | 32 | 3.3 | |
| 14 | Rear suspension (upper) | 32 | 44 | 4.5 | NOTE 1 |
| | (lower) | 32 | 44 | 4.5 | NOTE 1 |
| 15 | Swingarm pivot nut | 65 | 88 | 9.0 | NOTE 1 |
| 16 | Fork | | | | |
| | (fork damper assembly) | 56 | 76 | 7.7 | |
| | (fork bolt assembly) | 22 | 30 | 3.1 | |
| 17 | Rear shock arm nuts | | | | |
| | (swingarm side) | 38 | 52 | 5.3 | NOTE 1, 5 |
| | (shock link side) | 38 | 52 | 5.3 | NOTE 1, 5 |
| 18 | Rear shock link bolts | 27 | 37 | 3.8 | NOTE 1, 5 |
| 19 | Rear shock spring lock nut | 32 | 44 | 4.5 | |
| 20 | Battery terminal bolts | 1.5 | 2.0 | 0.2 | |
| 21 | Fuel pump mounting nuts/ cap nut | 8 | 11 | 1.1 | |
| 22 | Front brake master cylinder holder bolts | 7.3 | 9.9 | 1.0 | |
| 23 | Fuel tank bolts | 7 | 10 | 1.0 | |

NOTES: 1. U-nut
2. UBS nut
5. Apply molybdenum oil to the threads and flange surface.

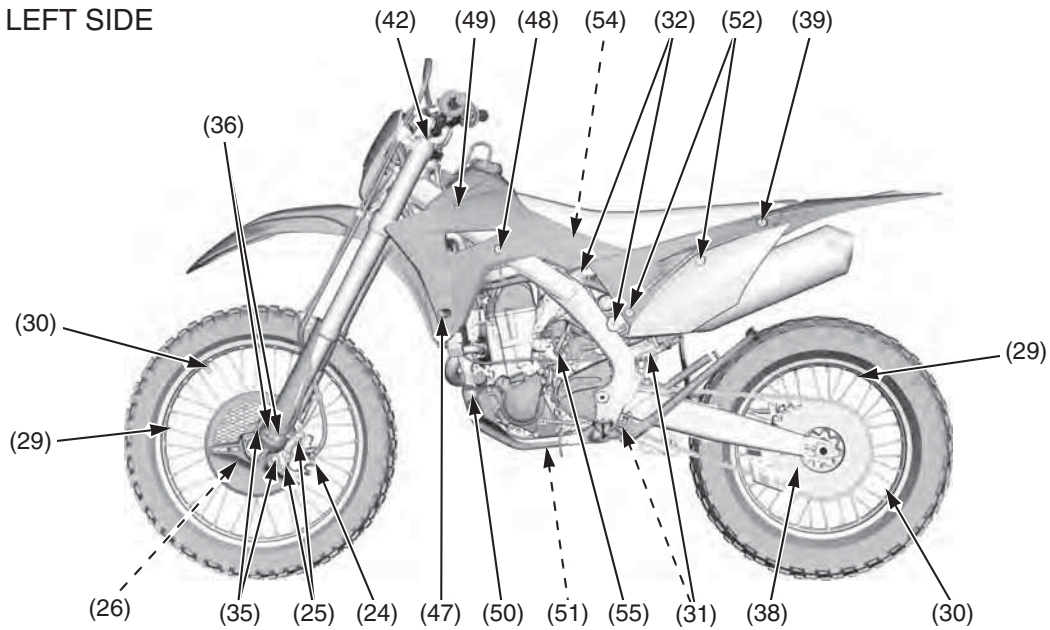


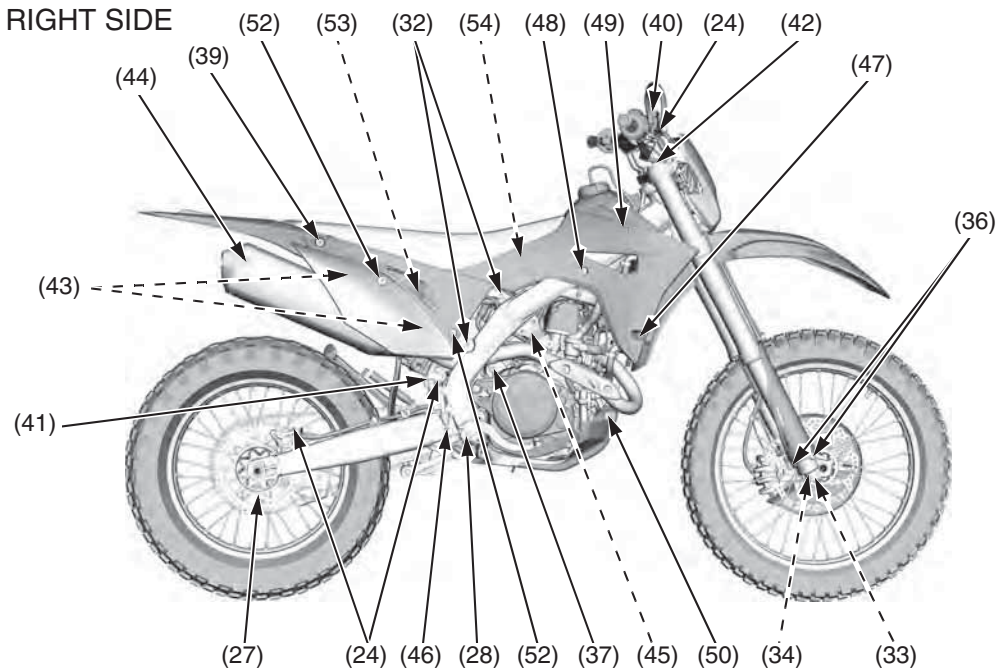


**FRAME**

| | Item | | Torque lbf·ft | Torque N·m | Torque kgf·m | Remarks |
|---|---|---|---|---|---|---|
| 24 | Brake hose oil bolts | | 25 | 34 | 3.5 | |
| 25 | Front brake caliper mounting bolts | | 22 | 30 | 3.1 | NOTE 4 |
| 26 | Front brake disc nuts | | 12 | 16 | 1.6 | NOTE 1 |
| 27 | Rear brake disc nuts | | 12 | 16 | 1.6 | NOTE 1 |
| 28 | Brake pedal pivot bolt | | 27 | 36 | 3.7 | |
| 29 | Spokes | (front) | 2.7 | 3.7 | 0.4 | |
| | | (rear) | 2.7 | 3.7 | 0.4 | |
| 30 | Rim locks | | 9 | 12 | 1.2 | |
| 31 | Drive chain roller | (upper) | 9 | 12 | 1.2 | NOTE 4 |
| | | (lower) | 9 | 12 | 1.2 | NOTE 1 |
| 32 | Subframe bolts | (upper) | 24 | 32 | 3.3 | |
| | | (lower) | 36 | 49 | 5.0 | |
| 33 | Fork center bolt | | 51 | 69 | 7.0 | |
| 34 | Fork center bolt lock nut | | 21 | 28 | 2.9 | |
| 35 | Disc cover bolts | | 10 | 13 | 1.3 | |
| 36 | Fork protector socket bolts | | 5.2 | 7.0 | 0.7 | NOTE 4 |
| 37 | Muffler clamp bolt | | 15 | 20 | 2.0 | |
| 38 | Driven sprocket nuts | | 24 | 32 | 3.3 | NOTE 1 |
| 39 | Seat mounting bolts | | 19 | 26 | 2.7 | |
| 40 | Front brake reservoir cap screws | | 0.7 | 1.0 | 0.1 | |
| 41 | Rear brake reservoir cap bolts | | 0.7 | 1.0 | 0.1 | |
| 42 | Fork air pressure release screw | | 1.0 | 1.3 | 0.1 | |
| 43 | Muffler mounting bolt A | | 19 | 26 | 2.7 | |
| | Muffler mounting bolt B | | 19 | 26 | 2.7 | |
| 44 | Tail cap cover bolts | | 6.6 | 9.0 | 0.9 | |
| | Spark arrester mounting bolts | | 3.9 | 5.25 | 0.5 | |
| 45 | Throttle cable adjuster lock nuts | | 3.0 | 4.0 | 0.4 | |
| 46 | Rear master cylinder push rod lock nut | | 4.4 | 5.9 | 0.6 | |
| 47 | Shroud A bolts | | 7 | 10 | 1.0 | |
| 48 | Shroud B bolts | | 7 | 10 | 1.0 | |
| 49 | Shroud C bolts | | 3.8 | 5.2 | 0.5 | |
| 50 | Engine guard A bolts/washers | | 7 | 10 | 1.0 | |
| 51 | Engine guard B bolt/washer | | 7 | 10 | 1.0 | |
| 52 | Side cover bolts | | 7 | 10 | 1.0 | |
| 53 | Air cleaner retaining bolt | | 1.8 | 2.4 | 0.2 | |
| 54 | Seat support base mounting bolts | | 7 | 10 | 1.0 | |
| 55 | Starter motor terminal bolt | | 5.2 | 7 | 0.7 | |

NOTES: 1. U-nut
4. Alock bolt: replace with a new one.

**Exhaust Emission Requirements**
The U.S. Environmental Protection Agency (EPA) and the California Air Resources Board (CARB), and require that your motorcycle comply with applicable exhaust, crankcase, and fuel permeation emission standards during its useful life, when operated and maintained according to the instructions provided.

CARB also requires that your motorcycle comply with applicable evaporative emission requirements during its useful life, when operated and maintained according to the instructions provided.

Compliance with the terms of the Distributor's Warranties for Honda Motorcycle Emission Control Systems is necessary in order to maintain a valid emissions system warranty.

The vehicle emission control information label (1) is attached to the left side of the frame.

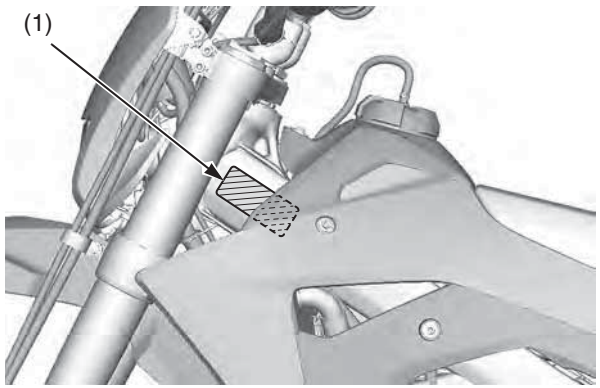

(1) vehicle emission control information label

**Noise Emission Requirements**
The EPA also requires that motorcycles built after January 1,1983 comply with applicable noise emission standards for one year or 1,865 miles (3,000 km) after the time of sale to the ultimate purchaser, the time operated and maintained according to the instructions provided.

**Noise Emission Control System**
TAMPERING WITH THE NOISE CONTROL SYSTEM IS PROHIBITED: U.S. federal law prohibits, the following acts or the causing thereof. (1) The removal or rendering inoperative by any person, other than for purposes of maintenance, repair or replacement, of any device or element of design incorporated into any new vehicle for the purpose of noise control prior to its sale or delivery to the ultimate purchaser or while it is in use; or (2) the use of the vehicle after such device or element of design has been removed or rendered inoperative by any person.

AMONG THOSE ACTS PRESUMED TO CONSTITUTE TAMPERING ARE THE ACTS LISTED BELOW:
- Removal of, or puncturing the muffler, baffles, reader pipes, or any other component which conducts exhaust gases.
- Removal of, or puncturing of any part of the intake system.
- Lack of proper maintenance.
- Removing or disabling any emissions compliance component, or replacing any compliance component with a non-compliant component.

**Problems that May Affect Motorcycle Emissions**
If you are aware of any of the following symptoms, have the vehicle inspected and repaired by your dealer.
1. Hard starting or stalling after starting.
2. Rough idle.
3. Misfiring or backfiring during acceleration.
4. After-burning (backfiring).
5. Poor performance (drive ability) and poor fuel economy.

Federal regulations prohibit removing or disabling a device or element of design that may affect your engine's emission performance unless your CRF will be used exclusively in competition. If you modify your engine for use in sanctioned competition events, you must deface or destroy the emission control information label.

If you loan, sell, or give your competition modified CRF to someone else, according to applicable law, you must inform the new owner/operator in writing that the vehicle is to be used for competition only.

# Emission Control Systems

**Source of Emission**
The combustion process produces carbon monoxide (CO), oxides of nitrogen (NOx), and hydrocarbons (HC).
Control of hydrocarbons and oxides of nitrogen is very important because, under certain conditions, they react to form photochemical smog when subjected to sunlight. Carbon monoxide does not react in the same way, but it is toxic.
Honda Motor Co., Ltd. utilizes various systems to reduce carbon monoxide, oxides of nitrogen and hydrocarbons.

**Exhaust Emission Control System**
The exhaust emission control system includes the following components that should not need adjustment, although periodic inspection by your dealer is recommended.

***PGM-FI System***
The PGM-FI system has four subsystems: Air Intake, Engine Control, Fuel Control, and Exhaust Control.
The Engine Control Module (ECM) uses various sensors to determine how much air is going into the engine. It then controls how much fuel is injected under all operating conditions.

***Ignition Timing Control System***
The ignition timing control system adjusts the ignition timing to reduce the amount of HC, CO, and NOx produced.

***Secondary Air Injection System***
The exhaust emission control system consists of a secondary air injection system.
The secondary air injection system introduces filtered air into the exhaust gases in the exhaust port. The secondary air injection system helps improve emission control performance.
No adjustments to this system should be made although periodic inspection of the components is recommended.

**Evaporative Emission Control System**
An evaporative emissions control system uses a canister filled with charcoal to adsorb fuel vapor from the fuel tank while the engine is off. The vapor is drawn into the engine and burned while riding.

Models sold in and used in California:
An add-on or modified part must be compliant with applicable ARB evaporative emission control standards. A violation of this requirement is punishable by civil and/or criminal punishment.

**Crankcase Emission Control System**
The engine is equipped with a closed crankcase system to prevent discharging crankcase emissions into the atmosphere. Blow-by gas is returned to the combustion chamber through the crankcase oil separator, air cleaner and throttle body.

**Fuel Permeation Emission Control System**
This vehicle complies with the Fuel Permeation Emission Control regulations of the U.S. Environmental Protection Agency (EPA) and the California Air Resources Board (CARB).
The fuel tank, fuel hoses, and fuel vapor charge hoses used on this vehicle incorporate fuel permeation control technologies.
Tampering with the fuel tank, fuel hoses, or fuel vapor charge hoses to reduce or defeat the effectiveness of the fuel permeation technologies is prohibited by federal regulations.

Some conventional gasolines are being blended with alcohol or an ether compound. These gasolines are collectively referred to as oxygenated fuels. To meet clean air standards, some areas of the United States and Canada use oxygenated fuels to help reduce emissions.
If you use an oxygenated fuel, be sure it is unleaded and meets the minimum octane rating requirement.

Before using an oxygenated fuel, try to confirm the fuel's contents. Some states/province require this information to be posted on the pump.

The following fuel blends are EPA-approved and have been approved for use in your motorcycle:

ETHANOL (ethyl or grain alcohol) up to 10% by volume.
You may use gasoline containing up to 10% ethanol by volume. Gasoline containing ethanol may be marketed under the name "Gasohol".

METHANOL (methyl or wood alcohol) up to 5% by volume.
You may use gasoline containing up to 5% methanol by volume as long as it also contains cosolvents and corrosion inhibitors to protect the fuel system. Gasoline containing more than 5% methanol by volume may cause starting and/or performance problems.
It may also damage metal, rubber, and plastic parts of your fuel system.

If you notice any undesirable operating symptoms, try another service station or switch to another brand of gasoline.

Fuel system damage or performance problems resulting from the use of an oxygenated fuel containing more than the percentages of oxygenates mentioned above are not covered under warranty.

Oxygenated fuels can damage paint and plastic. Be careful not to spill fuel when filling the fuel tank. Wipe up any spills immediately.

**NOTICE**

*Oxygenated fuels can damage paint and plastic.*

# Competition Logbook

Any serious competition effort relies heavily on the knowledge gained and compiled from previous racing events. The best way to organize the many bits of information is to record them in a logbook.

Your logbook can include such information as suspension adjustments, and tire selection. This detailed information, along with your comments, can prove valuable when you compete at the same track or on similar terrain.

Your logbook can also tell you when maintenance was performed and when it will be necessary again. Your logbook also lets you record any repairs and lets you keep track of the running time on the engine and suspension components.

If you choose to sell your CRF, the accurate maintenance records in your logbook might be the deciding deal-maker for a potential buyer.

Consider using different color pens or pencils to record important information on specific subjects. For example, record results in black, and suspension/chassis settings in blue.
Color codes will help you identify the information you want with a glance.

**Tuning & Adjustment Records**
Keep track of the settings and adjustments that worked best at a particular location. These items include:

- PGM-FI mode
- basic track conditions, altitude, and temperature
- suspension settings
- chassis adjustments tested and selected
- tire selection
- air pressure

**Competition Records**

- your placings
- thoughts to improve performance next time: both yours and your CRF's
- strategy notes

**Maintenance Records**

- regular interval maintenance
- repairs
- running time on engine
- running time on suspension components

**Timekeeping**
This Manual lists maintenance intervals for every-so-many motos or every-so-many hours of running.

Because all motos are not the same, the most effective way to schedule maintenance is by the hours you have run your CRF.

An official "guesstimate" is close enough for our timekeeping purposes. You may choose to record your time the same way aircraft operators do (but without the benefit of an electrical hourmeter). All running time is broken down into hours and tenths of an hour (each 6 minutes represents one tenth of an hour).

**Racing Records**
Information worth recording for this section of your logbook may include:

- Your placing in each moto and overall finishing position.
- Thoughts on what you could do to improve your performance next time.
- Notes on any patterns noted in choice of starting gate positions or in riding portions of the course as the day progressed that may prove helpful in future events.
- Any places on the course where you chose the wrong line and were passed too easily.
- Notes on strategy used by your competition or by riders in another event that are worth remembering.

**Maintenance Records**
Regular maintenance items you'll want to record in your logbook should include:

- Dates and results of cylinder, piston and ring examinations
- Patterns for frequency of need for decarbonization with a particular oil
- When you last performed shock linkage and swingarm pivot bearing maintenance
- Engine and suspension oil changes
- Chain, sprocket, chain roller and slider replacements
- Coolant changes and related component replacements
- Spark plug, brake pad and control cable replacements

In addition, you should record any irregularities noted in component wear so you'll remember to keep a close eye on these areas in the future.

| Date | Running Time | Location/Event | Comments (Suspension Settings, Chassis Adjustments, Maintenance Performed, etc.) |
|---|---|---|---|
| | | | |
| | | | |
| | | | |
| | | | |
| | | | |
| | | | |
| | | | |
| | | | |
| | | | |
| | | | |
| | | | |
| | | | |
| | | | |
| | | | |
| | | | |
| | | | |
| | | | |
| | | | |
| | | | |
| | | | |
| | | | |
| | | | |
| | | | |
| | | | |

(Make several photocopies of this page for future use)

# Optional Parts List

These parts and tools may be ordered from your authorized dealer.

| FRAME | Remarks |
|---|---|
| Driven sprocket<br>Standard | < >: Drive chain links<br>51 Teeth, Aluminum<br><114> |
| Drive chain size/link | RK520EXU/120LJFZ |
| Handlebar lower holder<br>Standard | 0.1 in (3 mm) offset |
| Optional | no offset |

| TOOLS | Remarks |
|---|---|
| Pin spanner A | To adjust spring preload.<br>(two spanners required) |
| Workstand | For maintenance |
| Air gauge | For checking tire air pressure |

| FRAME | Remarks |
|---|---|
| Fork spring | 28.6 lbf/in (5.0 N/mm) |
| Standard (Medium) | 2 scribe marks or no mark (factory products) |
| Optional | |
| Soft | 27.4 lbf/in (4.8 N/mm)<br>No mark |
| Stiff | 29.7 lbf/in (5.2 N/mm)<br>3 scribe marks |

| FRAME | Remarks |
|---|---|
| Shock spring | 296.9 lbf/in (52 N/mm) |
| Standard (Medium) | No mark (factory products)<br>Red paint (aftermarket parts) |
| Optional | |
| Soft | 285.5 lbf/in (50 N/mm)<br>Pink paint |
| Stiff | 308.3 lbf/in (54 N/mm)<br>White paint |

The standard fork spring and shock spring mounted on the motorcycle when it leaves the factory are not marked. Before replacing the springs, be sure to mark them so they can be distinguished other optional springs.

There are numerous spare parts you can take to an event to help ensure you get in a full day of riding. In addition to the usual nuts and bolts, consider the following:

## Spare Parts

spark plugs
air cleaner (clean & oiled, sealed in a plastic bag)
chain & masterlinks
chain guide slider
chain guide
chain rollers
tire tubes (front & rear)
fenders
footpegs
fuel feed hose
fuel pump filter
number plate & side covers
handlebar
grips
levers (brake & clutch)
clutch lever handlebar mount
clutch cable
throttle assembly
throttle cable
shift lever
brake pedal
spokes (front & rear, each side)
sprocket
assorted nuts, bolts, washers, screws, cotter pins

**Additional Spares**
fuel pump
front brake master cylinder
rear brake assembly
wheels & tires (front & rear, mounted)
clutch discs and plates
engine oil
seat
ignition components
radiator hoses
radiator shrouds (L & R)
brake hoses (front & rear)

## General Tools

sockets (3/8 in drive)
screwdrivers: blade & Phillips No. 1, 2, 3
wrench, large adjustable
wrenches: open end & box
wrenches: hex (Allen)
wrench, spoke
torque wrench (metric scale, click-stop style)
pliers: standard, needle-nose, channel-lock set
hammer, plastic head
syringe with adjustable stop
air pressure gauge
tire irons
tire pump or air tank
feeler gauge set
Vernier caliper (metric)
pressure/vacuum testing equipment

## Honda Special Tools

Any special tools for your CRF purchased from your dealer.

- Tensioner stopper 07AMG-001A100
- Lock Nut Wrench 07WMA-KZ30100
- Spoke Wrench 07JMA-MR60100
- Spoke Wrench 070MA-KZ30100
- Piston Base 07958-2500001
- Fork Rod Holder 07AMB-KZ3A100

## Chemical Products

Pro Honda GN4 4-stroke Oil (Engine Oil)
Pro Honda HP Fork Oil, SS-19
Honda DOT 4 Brake Fluid
Pro Honda HP Chain Lube
Pro Honda Foam Air Filter Oil
Pro Honda Hondabrite
Pro Honda Dielectric Grease
Pro Honda Handgrip Cement
Pro Honda Hondalock
Molybdenum disulfide grease (containing more than 3% molybdenum disulfide additive Moly Paste 77)
Pro Honda Foam Air Filter Sealer
Multi-Purpose Grease
Rust-inhibiting oil
Cable lubricant
Pro Honda HP Coolant
Urea based multi-purpose grease designed for high temperature, high pressure performance (example: EXCELITE EP2 manufactured by KYODO YUSHI, Japan or equivalent)

## Other Products

pliers-safety wire
safety wire
mechanic’s wire
duct tape
plastic wire bands
hose clamps
drop light
electrical tape
Scotch-Brite Hand Pad #7447 (maroon)
Teflon tape

# Wiring Diagram

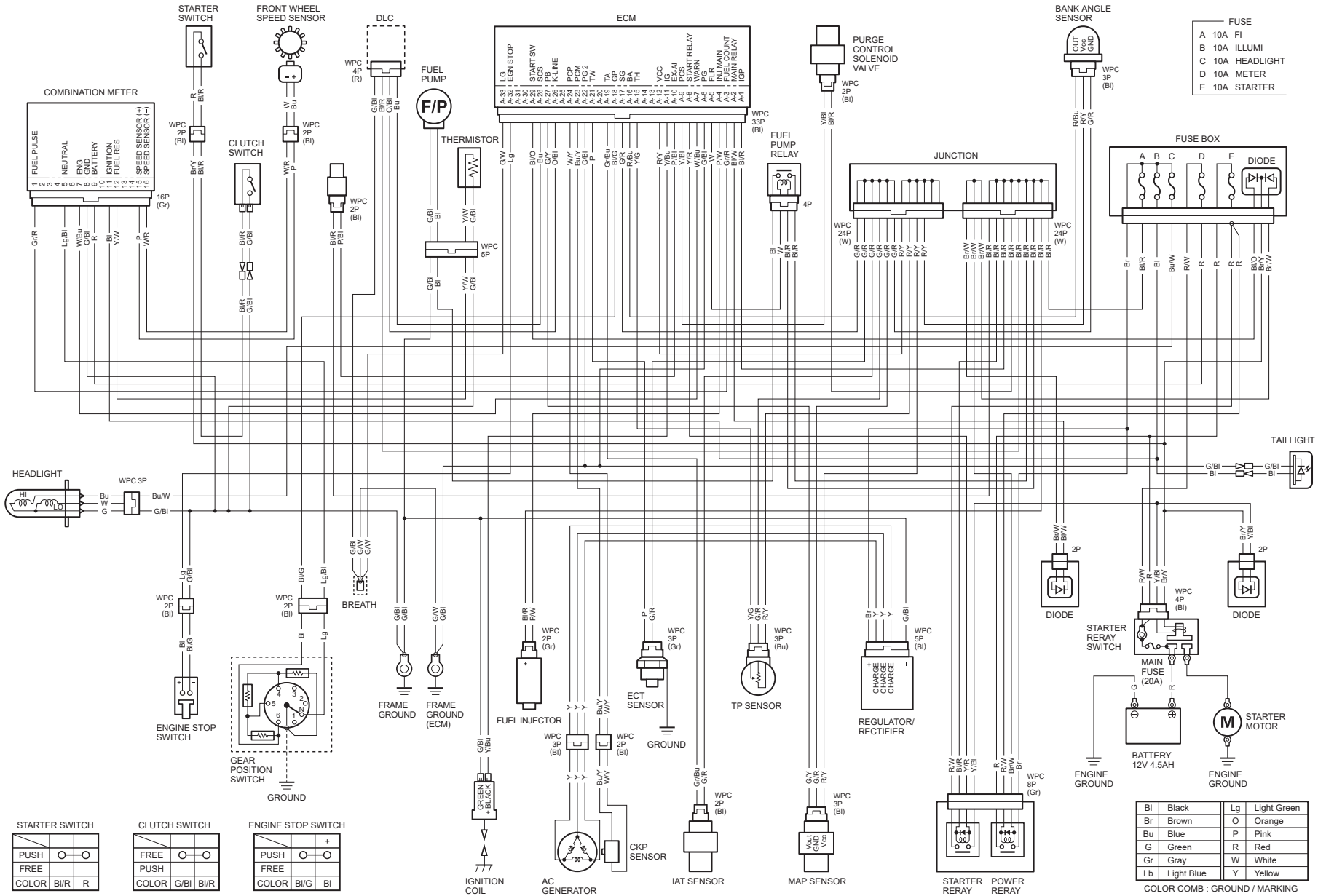

# Consumer Information

This section contains information about contacting Honda and how to get an official Honda Service Manual.

Authorized Manuals ..... 182
Warranty Coverage ..... 183
Warranty Service ..... 184
Contacting Honda ..... 185
Your Honda Dealer ..... 186

# Authorized Manuals

The Service Manual used by your authorized dealer is available from your Honda dealer or Helm, Inc.

Also available but not necessary to service your model is the Honda Common Service Manual which explains theory of operation and basic service information for various systems on Honda motorcycles, scooters and ATV.

The Winter Storage Guide in conjunction with the Owner's Manual and Service Manual can help you prepare your Honda motorcycle, scooter, ATV, and SxS for winter storage.

These Honda manuals are written for the professional technician, but most mechanically-capable owners should find them helpful if they have the proper tools and skills. Special Honda tools are necessary for some procedures.

| Publication Item No. | Description |
|---|---|
| 61MKE71 | 2020 CRF450X Service Manual |
| 61CSM00 | Common Service Manual |
| S9507 | Winter Storage Guide |
| 31MKE710 | 2020 CRF450X Owner’s Manual |

**Order online: www.helminc.com**
**Order Toll Free: 1-888-CYCLE93 (1-888-292-5393)**
*(NOTE: For Credit Card Orders Only)*
Monday - Friday 8:00 AM - 6:00 PM EST

- Emission Control System Warranty
- Noise Control Warranty

Your new Honda is covered by certain warranties as described in the Honda Motorcycle Warranties Booklet that was provided to you by your Honda dealer.
Please read this booklet and be aware of the responsibilities, restrictions, and exclusions which apply.
Please also keep your Honda owner's card with your Warranties Booklet.

It is important to realize that your warranty for your Honda applies to defects in material or factory workmanship. Your warranty coverage does not apply to normal wear or deterioration associated with using the motorcycle.

Your warranty coverage will not be voided if you choose to perform your own maintenance. However, you should have the proper tools and service information and be mechanically qualified. Failures that occur due directly to improper maintenance or lack of maintenance are not covered.

# Warranty Service

Please remember that recommended maintenance interval servicing is not included in your warranty coverage. Additionally, your warranty does not apply to the normal wear of items (such as brakes, tires etc.).

If you believe you have a problem with your Honda, call the service department of your Honda dealer. Make an appointment for an inspection and diagnosis. Remember, as the owner of the motorcycle, you will be asked to authorize that inspection. Your dealer will give you the results of the inspection. If the problem is covered under warranty, your dealer will perform the warranty repairs for you.

If you have questions about warranty coverage or the nature of the repair, it is best to talk to the Service Manager of your Honda dealer.

Sometimes, in spite of the best intentions of all concerned, a misunderstanding may occur. If you aren't satisfied with your dealer's handling of the situation, we suggest you discuss your problem with the appropriate member of the dealership's management team. If the problem has already been reviewed with the Service Manager, Parts Manager, Sales Manager, etc., contact the Owner of the dealership or his designated representative.

Your owner's manual was written to cover most of the questions you might ask about your CRF. Any questions not answered in the owner's manual can be answered by your dealer. If your dealer doesn't have the answer right away, they will get it for you.

If you have a difference of opinion with your dealer, please remember that each dealership is independently owned and operated. That's why it's important to work to resolve any differences at the dealership level.

If you wish to comment on your experiences with your CRF or with your dealer, please send your comments to the following address:

Motorcycle Division, American Honda Motor Co., Inc., P.O. Box 2200, Torrance CA 90509- 2200, Mailstop: 100-4C-7B,
Telephone: (866) 784-1870.

Please include the following information in your letter:

- name, address, and telephone number
- product model, year, and VIN
- date of purchase
- dealer name and address

We will likely ask your dealer to respond, or possibly acknowledge your comments directly.

# Your Honda Dealer

Once you purchase your new Honda, get familiar with the organization of your Honda dealer so you can utilize the full range of services available.

The service department is there to perform regular maintenance and unexpected repairs. It has the latest available service information from Honda.

The parts department offers Honda Genuine Parts, Pro Honda products, Honda Genuine Accessories. The same quality that went into your Honda can be found in Honda Genuine replacement parts. You'll also find comparable quality in the accessories and products available from the parts department.

Your Honda dealer can inform you about competition events in your area.

We're sure you'll be as pleased with the service your Honda dealer continues to provide after the sale as you are with the quality and dependability of your Honda.

BLANK PAGE

# Index


## A

accessories ..... 4
adjustments,
  chassis ..... 153
  control freeplay ..... 72, 75, 116
  for competition ..... 139
  personal fit ..... 155
  suspension, front ..... 140
  suspension, rear ..... 143
  suspension, track conditions ..... 148
  tire selection, track condition ..... 154
after competition maintenance ..... 41
air cleaner ..... 69
air pressure,
  front suspension ..... 140
  tires ..... 121
apparel, protective ..... 2
appearance care ..... 136
authorized manuals ..... 182

## B

backlight brightness adjustment ..... 13
basic operation ..... 19
battery ..... 133
before riding ..... 15
between motos & practice maintenance ..... 40
brakes,
  fluid level ..... 117
  lever, front adjustment ..... 116
  pad wear ..... 119
  pedal height ..... 116
break-in guidelines ..... 23, 27

## C

capacity, fuel ..... 54
care, appearance ..... 136
chain drive ..... 124
changing the fuel mileage unit ..... 14
changing the speed and mileage unit ..... 14
chassis adjustments ..... 153
cleaner, air ..... 69
cleaning, appearance care ..... 136
competition logbook ..... 176
consumer information ..... 181
controls ..... 7
coolant ..... 66
customer service ..... 186
cylinder system ..... 92

## D

damping adjustments,
  front ..... 141
  rear ..... 144
dealer, your Honda ..... 186
diagram, wiring ..... 180
digital clock setting ..... 13
drive chain ..... 124

## E

engine,
  does not start ..... 161
  flooded ..... 22
  idle speed ..... 74
  lacks power ..... 161
  mode select button ..... 139
  number ..... 168
  oil ..... 63
  pinging ..... 54
  starting ..... 21
  stop button ..... 22
  stopping ..... 22
environment, protecting ..... 160

## F

filter,
  air ..... 69
  fuel pump ..... 57
  oil ..... 64
flooded engine, starting ..... 22
fork,
  front suspension adjustment ..... 140
  front suspension inspection ..... 99
  oil recommendation ..... 102
front brake lever adjustment ..... 116
front suspension maintenance ..... 140
fuel ..... 54
fuel mileage meter ..... 12
fuel,
  line inspection ..... 55
  line replacement ..... 55
  oxygenated ..... 175
  pump filter ..... 57
  refueling ..... 54
  tank capacity ..... 54

## G

gap, spark plug ..... 80
gasohol ..... 175
guidelines,
  suspension adjustment ..... 149

## H

handlebar inspection ..... 131
headlight & taillight ..... 135
Honda,
  service manual ..... 182
  your dealer ..... 186

## I

identification, vehicle ..... 168
idle knob, fast ..... 21, 74
idle speed, engine ..... 74
indicator,
  fuel reserve indicator ..... 9
  MIL indicator ..... 9
  neutral indicator ..... 9
inspection, pre-ride ..... 17
instruments ..... 7

## L

logbook, competition ..... 176

## M

maintenance record ..... 35
maintenance,
  after competition ..... 41
  before & after competition ..... 40
  between motos & practice ..... 40
  component locations ..... 42
  general competition ..... 36
  importance ..... 30
  safety ..... 31
  schedule ..... 32
manual, service ..... 182
modifications ..... 4
Multi-function Display ..... 7
multi-function display ..... 10

## O

odometer ..... 12
oil,
  engine ..... 63
  fork ..... 102
operating instructions ..... 19
operation component locations ..... 8
optional,
  parts list ..... 178
oxygenated fuels ..... 175

## P

pads, brake ..... 119
parts, optional ..... 178
personal fit adjustments ..... 155
pinging, engine ..... 54
plug, spark ..... 80
pre-load, rear suspension ..... 143
pre-ride inspection ..... 17
protective apparel ..... 2

## R

rear suspension adjustment ..... 143
riding,
  apparel ..... 2
  basic operation ..... 19
  before ..... 15
  important safety information ..... 2
  safety precautions ..... 2

(cont'd)

## S

safety,
a few words about ..... 5
important information ..... 2
important precautions ..... 2
maintenance ..... 31
riding precautions ..... 20
schedule, maintenance ..... 32
seat ..... 43
serial numbers ..... 168
service,
customer ..... 186
manuals ..... 182
side cover ..... 44
spare parts ..... 179
spark arrester ..... 129
spark plug,
maintenance ..... 80
reading ..... 152
specifications ..... 169
speedometer ..... 12
spring pre-load, rear suspension ..... 143
starting,
engine ..... 21
troubleshooting ..... 161
steering stem inspection ..... 131
stopping engine ..... 22
storage ..... 159
subframe ..... 49
suspension adjustment,
for track conditions ..... 148
front ..... 140
guidelines ..... 149
rear ..... 143
suspension,
front ..... 99
rear ..... 115

## T

throttle,
freeplay ..... 72
inspection ..... 73
lubrication ..... 73
tires,
air pressure ..... 121
flat ..... 121
selection ..... 122
tools ..... 179
torque specifications,
engine ..... 170
frame ..... 171, 172
transporting ..... 158
tripmeter ..... 12
troubleshooting ..... 161
tubes, replacing ..... 121
tuning tips ..... 152

## V

valve clearance ..... 81
vehicle identification no. (VIN) ..... 168

## W

washing your motorcycle ..... 136
wheels ..... 120
wiring diagram ..... 180

The following is a brief, but important collection of information you need to know about your CRF. You'll also find space to record important notes.

## How To Avoid Costly Repairs

The engine of your CRF can be the most expensive component to repair. Proper maintenance, especially the use of the recommended fluids and filters, prevents premature wear and damage.

Frequent causes of costly engine repairs are:

- Engine oil: insufficient quantity, improper oil.
- Air cleaner: dirty, leaking because of improper installation (poor seal)

Record important information here:

| | |
|---|---|
| VIN | |
| Engine No. | |
| Owner's: | |
| Name | |
| Address | |
| City/State | |
| Phone | |
| Dealer's: | |
| Name | |
| Address | |
| City/State | |
| Phone | |
| Service Mgr. | |

| | | | | | |
|---|---|---|---|---|---|
| Maintenance | Regular Off-Road Use (Non-Competition):<br>Initial: 100 miles (150 km)<br>Regular: every 600 miles (1,000 km)<br>Competition Use:<br>The maintenance schedule (page 34) lists service frequencies for:<br>each race or about 3.5 hours, every 2 races or about 7.5 hours, every 4 races or about 15.0 hours, every 6 races or about 22.5 hours and every 8 races or about 30.0 hours | | | | |
| Pre-ride Inspection | Check the items listed on the Pre-ride Inspection checklist each time before you ride (page 17) | | | | |
| Fuel/Tank Capacity | unleaded gasoline, pump octane number of 91 or higher<br>tank: 2.01 US gal (7.6 ℓ) | | | | |
| Engine Oil/Capacity | Pro Honda GN4 4-stroke Oil or an equivalent motorcycle oil.<br>1.22 US qt (1.15 ℓ) after draining and filter change<br>1.16 US qt (1.10 ℓ) after draining | | | | |
| Tires | Front | 80/100-21 51M | | Rear | 110/100-18 64M |
| | | DUNLOP | MX52F | | DUNLOP MX52 |
| | Type | bias-ply, tube | | | |
| Tire Pressure (cold) | Front: 22 psi (150 kPa, 1.50 kgf/cm$^2$)<br>Rear: 22 psi (150 kPa, 1.50 kgf/cm$^2$) | | | | |
| Spark Plug | standard: SILMAR9A-9S (NGK)<br>optional: SILMAR10A-9S (NGK) | | | | |
| Coolant | ethylene glycol antifreeze (silicate-free) for aluminum engines in 50/50 solution with Pro Honda HP Coolant or an equivalent distilled water. | | | | |
| Fuse | main: 20 A<br>other: 10 A | | | | |
| Drive Chain Size/Link | RK520EXU/116LE | | | | |

# Quick Reference

These symbols are used in Operating Controls and Basic Operating Instructions sections:

| SYMBOL | COMPONENT | SEE PAGE |
|---|---|---|
| | fast idle knob | 8, 21 |
| | START button | 8, 21 |

California Proposition 65 Warning

⚠ **Warning:** Operating, servicing and maintaining a passenger vehicle or off-highway motor vehicle can expose you to chemicals including engine exhaust, carbon monoxide, phthalates, and lead, which are known to the State of California to cause cancer and birth defects or other reproductive harm. To minimize exposure, avoid breathing exhaust, do not idle the engine except as necessary, service your vehicle in a well-ventilated area and wear gloves or wash your hands frequently when servicing your vehicle. For more information go to www.P65Warnings.ca.gov/passenger-vehicle.